Anveshan

BUILDING BRIDGES TO DISCOVER

2021

Science & Engineering Fair
Mumbai

AGASTYA INTERNATIONAL FOUNDATION
SUPPORTED BY R. JHUNJHUNWALA FOUNDATION & OTHERS

in partnership with

SYNOPSYS®

AGASTYA INTERNATIONAL FOUNDATION
SUPPORTED BY R. JHUNJHUNWALA FOUNDATION & OTHERS

In Partnership with SYNOPSYS®

Anveshana
BUILDING BRIDGES TO DISCOVER

Student Projects Technical Record

Release on the occasion of

Science & Engineering Fair of Selected Projects

On
1st to 6th March 2021 (ONLINE)

Organised by

Agastya International Foundation

Insupport with

Synopsys

CONTENTS

1. ABOUT AGASTYA INTERNATIONAL FOUNDATION
2. ABOUT SYNOPSYS
3. ABOUT ANVESHANA
4. LIST OF PROJECTS EXHIBITEDIN THE FAIR
5. PROJECT DESCRIPTION

ABOUTAGASTYA

ABOUT AGASTYA INTERNATIONAL FOUNDATION

Email: agastyaadmin@gmail.com | phone: +91-80-2354 5054 / 4112 4132

Introduction

Founded in April 1999, Agastya is a charitable education trust that runs the world's largest mobile hands-on science education program for economically disadvantaged children and teachers. By making practical, hands-on science education accessible to rural government schools, Agastya aims to transform and stimulate the thinking of underprivileged children and teachers.

Agastya Vision:

Creatively skilled rural India..
Entrepreneurially-enabled..
Improving the environment to..
Sustain it for future Generations....

Mission of Agastya

Infuse and propagate a creative tempter in disadvantaged rural children and teachers through:

- **Experiential, hands-on science education**
- **Teacher training and education**
- **Scalable, sustainable and environment-friendly methods**
- **Art and Ecology**

Agastya's mission to unlock the creative potential of poor children and teachers across India is being achieved through:

- 100 + Mobile Labs which take hand-on science education and digital literacy to the village doorstep.
- 45 Science Centers catering as science resource hubs for surrounding schools and communities.
- 105 + Lab in a Box sets which nurtures a high impact and participatory learning experience for students and teachers.
- 245 Operation Vasantha Centres, community run program to provide remedial classes for students and drop-outs.
- 172- Acre Creativity Lab campus in Andhra Pradesh (2 hours from Bangalore) which houses science, art, astronomy

Agastya has reached over 5 million children and 200,000 teachers in 14 states, and is supported by scientists and educators in the country.

The Prime Minister's National Knowledge Commission (has recommended the Agastya model for nationwide dissemination, http://knowledgecommission.gov.in/downloads/recommendations/PMLetterM&S.pdf) and the Clinton Global Initiative has commended Agastya for its long term "commitment to action."

ABOUT AGASTYA INTERNATIONAL FOUNDATION

Email: agastyaadmin@gmail.com | phone: +91-80-2354 5054 / 4112 4132

How Agastya International Foundation has positively affected the lives of disadvantaged children:

Rote-based, didactic and uninspiring education in India has deprived over 250 million disadvantaged children of the tools to overcome poverty. Instead, it has produced education apathy, a high dropout rate and youth that lack skills and confidence, creative-thinking and problem-solving abilities. Most schools do not have labs. Opportunities for participative, hands-on learning that sparks curiosity, and stimulates and empowers children and teachers are almost non-existent. Teacher training is divorced from the realities of the school classroom. Seeing little value in education, rural parents prefer to send their children to work in farms, thus perpetuating a cycle of poverty.

Operating one of the largest hands-on science education programs in the world, Agastya offers disadvantaged children access to dynamic hands-on education that makes learning fun, awakens curiosity, encourages questioning, enhances understanding, and fosters creative-thinking, problem-solving and communication skills.

Agastya's vision of 'a creative India' - 'tinkerers, creators, and solution-seekers ...humane, anchored and connected' – is being achieved through its mission to spark the creative temper among millions of disadvantaged children. Using experiential and hands-on, child-centric learning, teacher education and scalable methods, Agastya aims to bring about a shift in five vital behaviors - 'Yes to Why,' 'Looking to Observing,' 'Passiveness to Exploring,' 'Text-book to Hands-on,' and 'Fear to Confidence'

Agastya Creativity Lab at Gudivanka Village, Kuppam, Andhra Pradesh, India

Agastya's unique 172 acre 'Creativity Lab' is at Gudivanka Village, Kuppam, Andhra Pradesh, India. The Campus or "factory of ideas", boasts several labs dedicated to hands-on learning activities in science, maths, ecology, media and art. Over the years, the Campus has played host to esteemed educators, scholars, researchers, academicians and dignitaries from various domains. In addition to subject specific labs, the Campus houses a Discovery Center which houses life size interactive models, Center for Creative Teaching (CCT) which prepares Agastya instructors and rural Govt. Teachers, an Art Lab, a Media Lab, an open air Ecolab and a Robotics Lab. The latest developments include 'Guru-Gruha' Astronomy center, VisionWorks' model-making workshop, Library and IT Centre, Performing Arts Centre and an Innovation Hub.

ABOUT AGASTYA INTERNATIONAL FOUNDATION

Email: agastyaadmin@gmail.com | phone: +91-80-2354 5054 / 4112 4132

Third Party Impact Studies:

MHRD study on 2048 children from 256 schools

- 70% + children and teachers welcome Agastya &demand increase in interventions
- Enriches and fills gap in the curriculum
- Increases interest in Science; Gives insight into
- Scientific methods
- Promotes concept retention and development
- Increase in Creativity, Problem-solving and
- Leadership skills among Young Instructor Leaders (YIL's)

Best Practices Foundation study of 1348 children in Karnataka

- Provides professional development for teachers
- 100% increase in Awareness of alternative learning methods
- 100% increase in Motivation to study science
- 50% to 100% leap in Curiosity

Achievements and Recognitions

- Received humanitarian prize money from former President of India, Dr. A.P.J. Abdul Kalam.
- Agastya partners with Dr. Kalam in Darbhanga, Bihar through the Mobile Lab program
- Featured on "Amazing Indians", Times Now News Channel
- Agastya wins Google Impact Awards in India for the revolutionary TechLaBike project.
- Agastya's 'commitment to action' was recognized by the Clinton Global Initiative in 2008
- The Prime Minister's National Knowledge Commission recommended the Agastya model for India-wide scale-up
- Agastya nominated to list of 100 Global Innovators in April, 2013 by Rockefeller Foundation

Looking Forward…

Increase in college admissions, participation in science projects and competitions; demand for school labs and hands-on learning, and national interest in Agastya programs indicate that Agastya is positively impacting the lives of disadvantaged children.

"The lesson we derive out of the Agastya experience is that innovative and student friendly solutions are needed to enable scientific learning in the youth, especially those in rural and remote regions of the nations of the world."

– Former President of India, Dr. Abdul Kalam

ABOUT AGASTYA INTERNATIONAL FOUNDATION

Email: agastyaadmin@gmail.com | phone: +91-80-2354 5054 / 4112 4132

By clicking on the following links you can

Watch the Agastya Mobile Lab in action: http://www.youtube.com/watch?v=v7B0tf61jFc

Like us on FaceBook – https://www.facebook.com/Agastya.Foundation

Follow us on Twitter – www.twitter.com/AgastyaSparks

ABOUT SYNOPSYS

CorporateBackground

Synopsys,Inc.(Nasdaq:SNPS)providesproductsand servicesthat accelerate innovation in the global electronics market. As aleader in electronic design automation (EDA) and semi conduct orinte llectual property(IP), Synopsys'comprehensiveintegratedportfolioofsystem-level,IP,implementation,verification,manufacturing, optical and field-programmable gate array (FPGA)solutions help address the key challenges designers face such aspowerandyieldmanagement,system-to-siliconverificationandtime-to-results.Thesetechnology-leadingsolutionshelpgiveSynopsys customers a competitive edge in quickly bringing the best products to market while reducing costs and schedule risk. For morethan 25 years, Synopsy shasbeenat the heart of accelerating electronics innovation with engineers around the world having used Synopsys technology to successfully design and create billions of chipsand systems. The company is headquartered in Mountain View, California, and has approximately 90offices located through out North America, Europe, Japan, Asia and India.

- See more at:http://www.synopsys.com/Company/AboutSynopsys/Pages/About.aspx#sthas h.GSEbLS7b.dpuf

ABOUT ANVESHANA

Anveshan a Program isstructured around the concept to mentoring,"catch them
young"and"facilitate the in quisitiveminds".

"Mentoring is a process for the informal transmission of knowledge, social capital, andthe psychosocial support perceived by the recipient as relevant to work, career, orprofessional development; mentoring entails informal communication, usually face-to-face and during a sustained period of time, between a person who is perceived tohave greater relevant knowledge, wisdom, or experience (the mentor) and a personwhoisperceivedtohave less(theprotégé)
(source:http://en.wikipedia.org/wiki/Mentorship).

The program looks at Involving school students to provide an opportunity to work with engineering students to find solutions for the encountered social problems.

Theprogramenvisagedtobringtogetherstudentsfromvariousunderprivilegedschoolsand Engineeringcollegesinrespectivelocationsinandaround DelhiNCR–inacollaborative platform (Anveshana).

Engineering colleges will participate as teams with 2 members. The teams will select 2 students from near by under privileged schools (Govt. and Govt.aided schools)to mentor them to design and build models or projects around an identified social problem. In the process school children would directly get the opportunity to worktogether with more qualified under-graduates, and a chance to 'learn' the basicprinciples(alongwithhands-onskillsondiverseproductsandinterestingprocesses).The interaction with Juries and dignitaries would be a life-time experience for them tocherish. The school students thus will be exposed to entire planning, designing andbuilding process of the models and in turn will get educated in the scientific and engineering concepts behind the models in Anveshana-2016. (www.anveshana.org)

ProcessofAnveshana(EngineeringFair&Competition):

- ☐ Initial Screening of Engineering College Teams: Concept synopsis based on socialproblems and related Engineering solutions are invited from engineering collegeteamsforpre-screeningbythejury.
- ☐ Screening, selection of Synopsis and identifying mentees: Once selected the teamsare asked to contact local schools with underprivileged status and to

form schoolstudentteamsto plan, designandmake the models, while collaborating and mentoring the highschool students.

- ☐ ModelCreationandQualityCheckbyAgastyateam:Studentswillcreateknowledge networks between them, their peers and with external resource personsto create conceptual and methodological framework to create the models. Here,Agastyateamsalongwithassignedseniorresourcepersons(senioreducators ,engineersetc.) will visit the colleges to assist the teams concept ually and in the

  making of the models while providing inputs including scientific and technological in puts. One of the main reasons for these visits is to assure the quality of the collaboration and teaching-mentoring-learning out comes.
- ☐ Conceptual- Technological advice from Agastya: Agastya will also help the teams to establish links between prominent institutions like Indian Institute of Science, Institution of Engineers, Indian Institute Technology etc. –in case they need anytechnologicalorconceptual inputs.
- ☐ AnveshanaFairbegins: Themodelsthusmadewillbeexhibited inAnveshanaEngineering fair where the teams would be presenting the same in front of anexpert Jury for Judgment. During the fair, students display their research projects,working models and present their findings orally and through written journals to theJury (mostly a team of scientists and educators). The judging process involves seriesof interactions on the concepts, methodology and objectives of the projects donebythestudents.
- ☐ Delegatesattendingthefair:Afterthejudgingprocessstudentsfromvariousschool s and delegates representing various institutions are also expected to attendthe fair. Delegates attending the event will include scientists and educators fromlargenumberofinstitutionsacrossHyderabad.
- ☐ Valedictory: Prizes will be awarded at a valedictory function –towards the end of the fair.

ANVESHANAMILESTONES

Started the journey from 2011 and continuing till today

2018-19

8th Edition – Bangalore

6th Edition – Hyderabad

4th Edition– Delhi-NCR

2017-18

7th Edition – Bangalore

5thEdition –Hyderabad

3rdEdition –Delhi-NCR

2016-17

6th Edition – Bangalore

4th Edition – Hyderabad

2nd Edition–Delhi-NCR

2015-16

5th Edition – Bangalore

3rd Edition – Hyderabad

Launched–Delhi-NCR

2014-15

4th Edition – Bangalore

2nd Edition-Hyderabad

2013 -14

3rd Edition-Bangalore

Launched in Hyderabad

2012-13

2ndEdition-Bangalore

2011-12

AnveshanaLaunchedinBangalore

PROJECTS DISPLAYED IN THE FAIR			
CODE	PROJECT NAME	COLLEGE	SCHOOL
AS-M-01	AUTONOMOUS WATER ROVER	KIT colllege of engineering,Kolhapur	Private Highschool, Kolhapur
AS-M-02	Disaster alert for smart city	Viva Institute of Technology,Virar	KAI. P. R. PATIL UTKARSHA MADHYAMIK VIDYALAYA AND JR. COLLEGE
AS-M-03	Live Action Prosthetic Leg	SIES Graduate school of Technology Nerul	Adarsh Vidyalaya
AS-M-04	Onion harvester	Deogiri Institute of Engineering,A.bad	ShriNiketanHighschool
AS-M-05	Viability of Electric Vehicles	New Horizon Institute of Technology and Management,Thane	
AS-M-06	Paver Blocks by Plastic Waste	VPM's Maharshi Parshuram College of Engineering, Ratnagiri	SMT. RAKHUMAI PANDURANG PALSHETKAR VIDYALAYA, PALSHET
AS-M-07	Advanced IoT Home Automation	LokmanyaTilak College of Engineering, KoparKhairane	ADARSH VIDYALAYA
AS-M-08	AUTO-E-WASTE DISPOSAL USING ML	Viva Institute of Technology,Virar	KAI.P.R.PATIL UTKARSHA MADHYAMIK VIDYALAYA AND JR COLLEGE
AS-M-09	Smart Gadgets for Blind Humans	Sanghavi College Of Engineering,Nashik	Shree Ram Madhyamik vidyalaya
AS-M-10	Attendance sys During COVID-19	K J Somaiya institute of engineering ,	Rameshwar Vidya Mandir
AS-M-11	Automated Sea Bin	Viva Institute of Technology,Virar	Kai P.R.PatilUtkarsh Madhyamik Vidyalaya &Jr.College
AS-M-12	FREE ENERGY TRANSPORT MODEL	K J Somaiya institute of engineering and information technology	Vidynidhivrajlalparekh high school
AS-M-13	Smart Toilet	SIES GRADUATE SCHOOL OF TECHNOLOGY NERUL	NMMC School no 41
AS-M-14	IOT based Smart Sanitizer	LokmanyaTilak College of Engineering, Kopar Khairane	R. J. THAKUR VIDYAMANDIR
AS-M-15	SafeBit	PVG college of engineering,Nashik	PVGCOE
AS-M-16	Green Power House	Viva Institute of Technology,Virar	KAI. P. R. PATIL UTKARSHA MADHAYAMIK VIDYALAYA
AS-M-17	Recycling of grey water	VPM's Maharshi Parshuram College of Engineering,Ratnagiri	Smt.RakhumaiPandurangPashetkarVidhyalay,Palshet

AS-M-18	Fire Extinguisher By Sound Horn	Sanghavi College Of Engineering,Nashik	Maratha High School, Nashik
AS-M-19	Covid Patient Remote Health MS	Sanghavi College Of Engineering,Nashik	SARSWATI VIDYALAYA,NIPHAD AND MODERN ENGLISH SCHOOL NATALE,NIPHAD
AS-M-20	Bridge Monitoring System	SIES GRADUATE SCHOOL OF TECHNOLOGY NERUL	SHRI SAMARTH VIDYALAYA
AS-M-21	PARALIZATION TREATMENT	SIES GRADUATE SCHOOL OF TECHNOLOGY NERUL	
AS-M-22	Covid-19 Fighting Bot	SIES GRADUATE SCHOOL OF TECHNOLOGY NERUL	S.S.V. madhyamicvidhyalayghot
AS-M-23	Multipurpose Robot using Ardui	LokmanyaTilak College of Engineering, KoparKhairane	SHRI SADGURU VAMANBABA MADHY.VIDYALAYA,GHOT,PANVEL
AS-M-24	Warehouse Automation	Vivekanand Education Society's Institute of Technology,Mumbai	
AS-M-25	Smart lock	KIT colllege of engineering,kolhapur	
AS-M-26	UnderWaterImageClassification	PVG college of engineering,Nashik	Dr.ShalinitaiBhorase
AS-M-27	Agro prod shelf life extender	KIT colllege of engineering,kolhapur	YashwantraoBhauraoPatilVidhyamandir Kolhapur
AS-M-28	Touchless SAS for covid-19	K J Somaiya institute of engineering and information technology,mumbai	BMC SCHOOL NEHRUNAGAR URDU NO 1
AS-M-29	Black spot Detection	Sanghavi College Of Engineering,Nashik	Rangubaijunnare,Delhi public school
AS-M-30	Automatic santizing machine	LokmanyaTilak College of Engineering, KoparKhairane	NMMC School 31
AS-M-31	App to enhance mental health.	SIES GRADUATE SCHOOL OF TECHNOLOGY NERUL	Mulund Camp English School
AS-M-32	Reusable Construction Material	LAMBTON COLLEGE	MAHADEV SHASHTRI VIDYALAYA, SURAT
AS-M-33	Drilling using vegetable oil.	Deogiri Institute of Engineering,A.bad	
AS-M-34	Gesture Recognition toolkit	Amrutvahini college of engineering sangamnear	R.F.NAIK SCHOOL
AS-M-35	WOMEN'S SAFETY	RAMRAO ADIK INSTITUTE OF TECHNOLOGY	Sainath English High school, Christ academy

AS-M-36	Flight crash investigation	PVG college of engineering,Nashik	
AS-M-37	e-learning with online exam	PVG college of engineering,Nashik	Kaka sahebdeodharenglish medium school
AS-M-38	Digital Stethoscope AI	KJ Somaiya College	
AS-M-39	Feel-It : A XR based saas (AR Based Learning App)	PVG college of engineering,Nashik	ZP School Chinchora
AS-M-40	Pokia electric energy	Guru Govind Singh College of Engineering	ST. FRANCIS HIGH SCHOOL, RANE NAGAR
AS-M-41	Water treatment system	S.K.ShahCahwala college of education (KKM)Kapadwanj	Manekalal Desai Kishor Mandir, Kapadwani

1. AUTONOMOUS WATER ROVER

COLLEGE	KIT's College of Engineering Kolhapur
GUIDE	Prof. MihirKulkarni
COLLEGE STUDENTS	SarveshKhire (Mechanical Engineering TY) ArjunKhedekar (Mechanical Engineering TY)
SCHOOL STUDENTS	VardheshNarvekar (9th std.) PrathameshTikle (9th std.)
SCHOOL	Private High School, Kolhapur

ABSTRACT

Autonomous Water Rover, as the name suggests is a self-functioning rover deployed in water reservoirs with the purpose to clean the surface water plastic. The Rover not only helps in collecting the already accumulated plastic, but also helps in calculating the pollution level of the water. By doing so the main causes of the water pollution in the area can be deduced and proper measures can be suggested in further maintaining the water quality. The Rover also crushes the collected plastic thereby reducing further recycling cost of plastic. It targets the United Nations Sustainable Development Goal for Responsible Consumption and Production. The aim is to reduce the already accumulated plastic, reuse the collected plastic and recycle it hence reducing water plastic waste generation. The Rover also can prove to be large impacting factor to clean water and sanitation process, life under water which in turn will be helpful in maintaining the ecological balance.

Acknowledgements

We would like to thank Team Anveshana 2020-21 for bringing us this opportunity to present our idea and work on it. We would also thank Kolhapur Institute of Technology's College of (Autonomous) Engineering, Kolhapur for the support and facilities provided to us in the manufacturing of model. We thank our Mentor Prof. MihirKulkarni sir for guiding us throughout the project. We thank Prof. SandeshSangale sir for helping us with the 3D printing work. We would like to thank Private High school, Kolhapur for the support they have shown.

Introduction

Plastic is used everywhere. From the huge space vehicles to our day to day used products, everywhere we can find plastic. Since its inception in 1907, it has been widely accepted in the manufacturing industry because of its high durability, low cost, light weight and other properties. But a proper way to dispose this plastic was not researches until late 20th century. This has had a tremendous impact on the environment. The chemical structure of most plastics renders them resistant to many natural processes of degradation. Hence it stays in the environment and acts as a poison to the ecology. Most of the plastic thrown away ends up in the water bodies like lakes, rivers which eventually end up in the ocean. Due to ocean currents, the plastic is carried all over the world polluting majority of the water bodies. Studies tell that around 8 million tons of plastic waste escapes into the ocean every year. Once at sea, sunlight, wind, and wave action break down plastic waste into micro-plastics which are major cause of water pollution. Millions of animals are killed by plastics every year, from birds to fish to other marine organisms. Nearly 700 species, including endangered ones, are known to have been affected by plastics. This plastic also reacts with the water that we drink hence is also a threat to humankind.

In order to fight this plastic pollution, the UN has set a development goal of Clean Water and Sanitation which is expected to be fulfilled by 2030. Our Rover with its Autonomous working can be a huge asset in overcoming this issue. We know that the first process of any recycling

process is the plastic is crushed and cut in small pieces. Our Rover is equipped with a mechanism that will crush the collected plastic. This will reduce the recycling cost and also large amount of plastic could be collected in a single run.

We not only just collect the accumulated plastic, but we also make a move in avoiding further pollution caused in the water body.

Water is uniquely vulnerable to pollution. Known as a "universal solvent," water is able to dissolve more substances than any other liquid on earth. It's also why water is so easily polluted. Toxic substances from farms, towns, and factories readily dissolve into and mix with it, causing water pollution.This widespread problem of water pollution is jeopardizing our health. Unsafe water kills more people each year than war and all other forms of violence combined. Meanwhile, our drinkable water sources are finite: Less than 1 percent of the Earth's freshwater is actually accessible to us. Potentially harmful contaminants—from arsenic to copper to lead—have been found in the tap water of every single state in the nation.

The Rover will also collect samples of water at different locations and time. These location and time will be stored with the sample number. The sample will be further sent to lab for analysis. This will provide a detailed report of all the contaminants present in the water sample. This sample with samples from other locations will be used to make a plot of the pollution levels in the body and the root cause of the pollution would be determined. This will ensure that the water body will not be further damaged.

Literature Review

Currently there are a lot of different companies in market that have their own different solutions to solve the global plastic waste problem. Some of the companies are The Ocean Cleanup, Ichthion and The Great Bubble Barrier. The Ocean Cleanup has a leading market in the plastic collection industry. They have recently deployed their new *Interceptor* rover and claim to clean up about 90% of ocean plastic by 2040.

However if we see current global situation, the amount of plastic will only keep on increasing. According to the trade association PlasticsEurope the

world plastic production increased from 1.5 million tons in 1950 to 359 million tons in 2018.

Plastic wastes are accumulated in the aquatic ecosystems directly and indirectly by different kinds of sources. Land and ocean-based sources are critical sources of plastic pollution in coastal and marine ecosystems through *in-situ* and *ex-situ* pathways. Major land-based plastic pollution sources are freshwater input, residential & domestic activities, tourism, and other economic actions, including harbor operations. Browne et al. (2007) revealed that a significant amount of plastic debris release or escape even from the treatment systems. After that, such plastic debris accumulates into the natural freshwater ecosystems such as river and streams or subject to leachate into the groundwater and finally end up in the ocean. However, lotic freshwater ecosystems with directional, fast flow rates mainly lead to the accumulation of plastic debris in coastal areas. For example, the plastic waste from two freshwater ecosystems is accumulated into the ocean system around California, and approximately two billion plastic fragments release into the sea during three days' time.

Offshore activities such as commercial fishery, navigation actions, waste disposal, and shellfish/fish culture are key ocean-based sources that contribute to plastic debris accumulation into the marine and coastal zones. Offshore fishing and aquaculture-related operations have been identified as a significant source of plastic pollution into the ocean basins and coastal ecosystems by the number of literature records. Damaged fishing nets and abandoned, lost, or discarded fishing nets (ALDFG) can enter the offshore by fishers during fishing operations. Maritime and navigation activities are also another source of plastic accumulation in the offshore area of the sea. Marine vessels, intentionally or unintentionally, dump plastic litters into the ocean, with an accumulation rate of approximately 6.5 million tons per year into the deep sea by early 1990 (Derraik, 2002)

WATER POLLUTION

Water bodies can be polluted by a wide variety of substances, including pathogenic microorganisms, putrescible organic waste, plant nutrients, toxic chemicals, sediments, heat, petroleum (oil), and radioactive substances. Several types of water pollutants are considered below.

Domestic sewage Domestic Sewage is the primary source of pathogens (disease-causing microorganisms) and putrescible organic substances. Because pathogens are excreted in feces, all sewage from cities and towns is likely to contain pathogens of some type, potentially presenting a direct threat to public health. Putrescible organic matter presents a different sort of threat to water quality. As organics are decomposed naturally in the sewage by bacteria and other microorganisms, the dissolved oxygen content of the water is depleted. This endangers the quality of lakes and streams, where high levels of oxygen are required for fish and other aquatic organisms to survive.

Toxic waste

Waste is considered toxic if it is poisonous, radioactive, explosive, carcinogenic (causing cancer), mutagenic (causing damage

to chromosomes), teratogenicity (causing birth defects), or bio accumulative (that is, increasing in concentration at the higher ends of food chains). Sources of toxic chemicals include improperly disposed wastewater from industrial plants and chemical process facilities (lead, mercury, chromium) as well as Surface run off containing pesticides used on agricultural areas and suburban lawns (chlordane, dieldrin, heptachlor).

Thermal pollution

Heat is considered to be a water pollutant because it decreases the capacity of water to hold dissolved oxygen in solution, and it increases the rate of metabolism of fish.

Petroleum (oil) pollution

Indian Standard for Drinking Water as per BIS specifications (IS 10500-2012)

Arghyam has compiled a brief presentation which gives details of the permissible and desirable limits for various parameters in drinking water as per Bureau of Indian Standards (BIS) specifications for potable water (IS -10500: 2012). While the standards were first published in 1983, this is the second revision available on the BIS website.

The standard was adopted by the Bureau of Indian Standards with the following objectives -

- To assess the quality of water resources, and
- To check the effectiveness of water treatment and supply by the concerned authorities.

They apply to drinking water supplied by different Authorities/ Agencies/ Departments of State Governments and Central Government, wherever applicable in the country. They also apply to water supplied by Non-Government or Private Agencies for human consumption in any place of the country.

This standard specifies the acceptable limits and the permissible limits in the absence of alternate source. It is recommended that the acceptable limit is to be implemented as values in excess of those mentioned

under 'Acceptable' render the water not suitable. Such a value may, however, be tolerated in the absence of an alternative source. However, if the value exceeds the limits indicated under 'permissible limit in the absence of alternate source' the sources will have to be rejected.

Pesticide residues limits and test methods included in the document are based on consumption pattern, persistence and available manufacturing data. The limits have been specified based on WHO guidelines, wherever available. In cases where WHO guidelines are not available, the standards available from other countries have been examined and incorporated, taking in view the Indian conditions.

In this revision, additional requirements for ammonia, chloramines, barium, molybdenum, silver, sulphide, nickel, polychlorinated biphenyls and trihalomethanes have been incorporated while the requirements for colour, turbidity, total hardness, free residual chlorine, iron, magnesium, mineral oil, boron, cadmium, total arsenic, lead, polynucleararomatic hydrocarbons, pesticides and bacteriological requirements have been modified. Requirements and test methods for virological examination and for cryptosporidium and giardia have also been specified in the revision document.

The Central Water Commission provides a classification of the tolerance limits for inland surface waters for the various classes of water use. As per ISI-IS: 2296-1982, the tolerance limits of parameters are specified as per classified use of water depending on various uses of water. The following classifications have been adopted in India –

- Class A: Drinking water source without conventional treatment but after disinfection
- Class B: Outdoor bathing
- Class C: Drinking water source with conventional treatment followed by disinfection.
- Class D: Fish culture and wild life propagation
- Class E: Irrigation, industrial cooling or controlled waste disposal

ETHODOLOGY

The methodology adopted for the project is as follows –

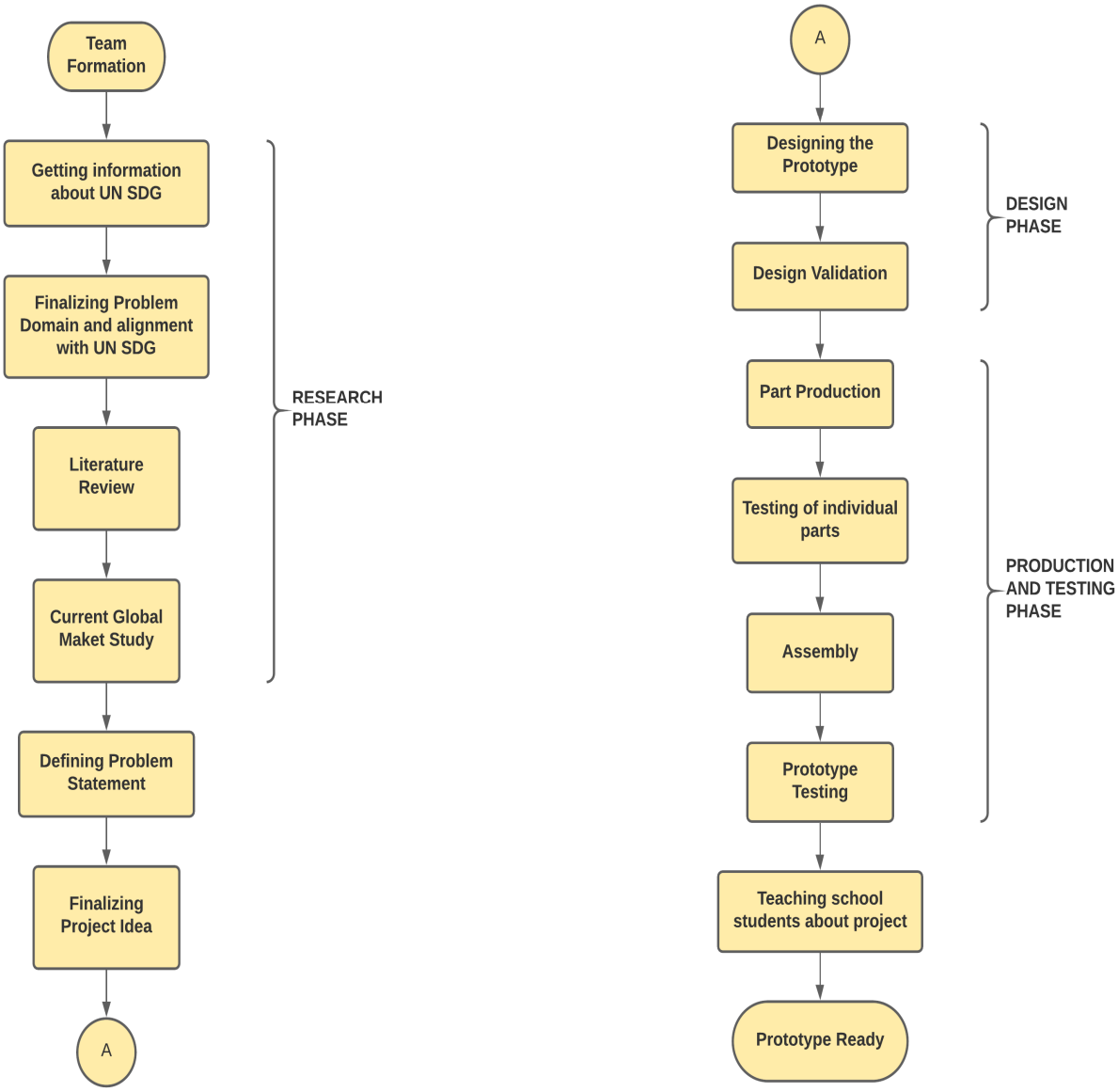

The complete methodology for the project can be broadly categorized into 4 major phases –

1) Research Phase
2) Problem Definition
3) Design Phase
4) Production and Testing

1. Research Phase

This phase was completely dedicated to the research of all the data related to project. We started with getting information about all the United Nations specified Sustainable Development Goals. The next step involved identifying various social, industrial and environmental problems. All the identified problems were then separated according to the SDGs that they come under. Group Discussions and meeting were held with team mates and mentor to finalize one problem domain.

Literature Review regarding the selected problem domain was done along with thorough market analysis of current global situation.

2. Problem Definition

In this phase all the data from previous market study was considered and a sub-domain (Plastic water pollution) was selected. The Problem Statement was defined. After thorough brainstorming many possible solutions were analyzed.

The atomic unit, MVP (Minimum Viable Product) and other features of the solution were discussed and the project solution idea of an Autonomous Water Rover was finalized.

3. Design Phase

In this Phase the actual designing of the prototype was started. For design of the model, we used the CATIA V5R16 engineering design software. Various possible designs were discussed and modelled. After a rough final sketch of model was made, then actual part modelling of various sub-assemblies was done. Parts were further subjected to analysis. For analysis we used the ANSYS Student version.

We performed structural strength tests, density calculations, stability analysis for the project.

The design was then finalized.

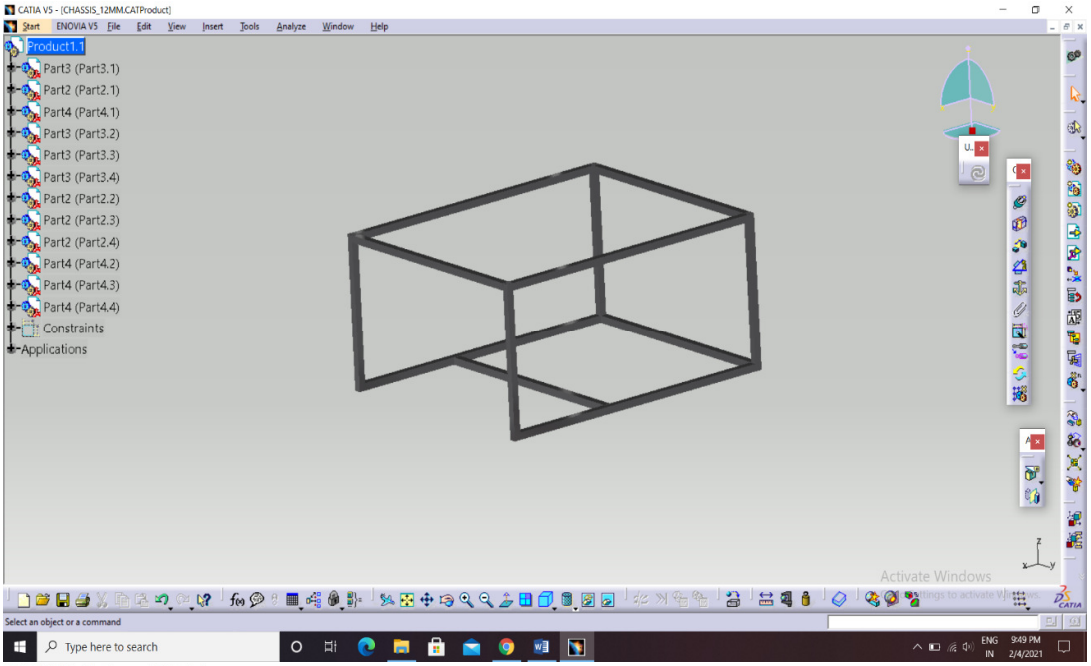
CATIA V5 - [CHASSIS_12MM.CATProduct]
Start
ENOVIA V5
File
Edit
View
Insert
Tools
Analyze
Window
Help
Product1.1
Part3 (Part3.1)
Part2 (Part2.1)
Part4 (Part4.1)
Part3 (Part3.2)
Part3 (Part3.3)
Part3 (Part3.4)
Part2 (Part2.2)
Part2 (Part2.3)
Part2 (Part2.4)
Part4 (Part4.2)
Part4 (Part4.3)
Part4 (Part4.4)
Constraints
Applications
Activate Windows
Select an object or a command
Type here to search
ENG
IN
9:49 PM
2/4/2021

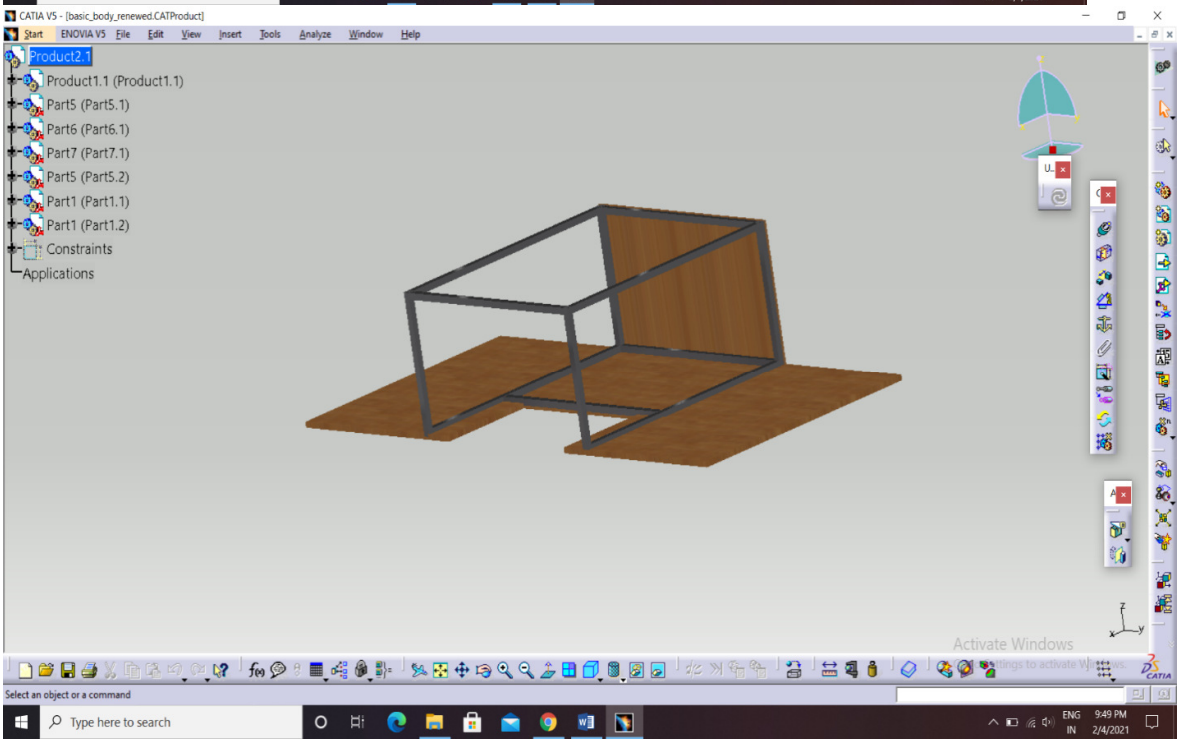
CATIA V5 - [basic_body_renewed.CATProduct]
Start
ENOVIA V5
File
Edit
View
Insert
Tools
Analyze
Window
Help
Product2.1
Product1.1 (Product1.1)
Part5 (Part5.1)
Part6 (Part6.1)
Part7 (Part7.1)
Part5 (Part5.2)
Part1 (Part1.1)
Part1 (Part1.2)
Constraints
Applications
Activate Windows
Select an object or a command
Type here to search
ENG
IN
9:49 PM
2/4/2021

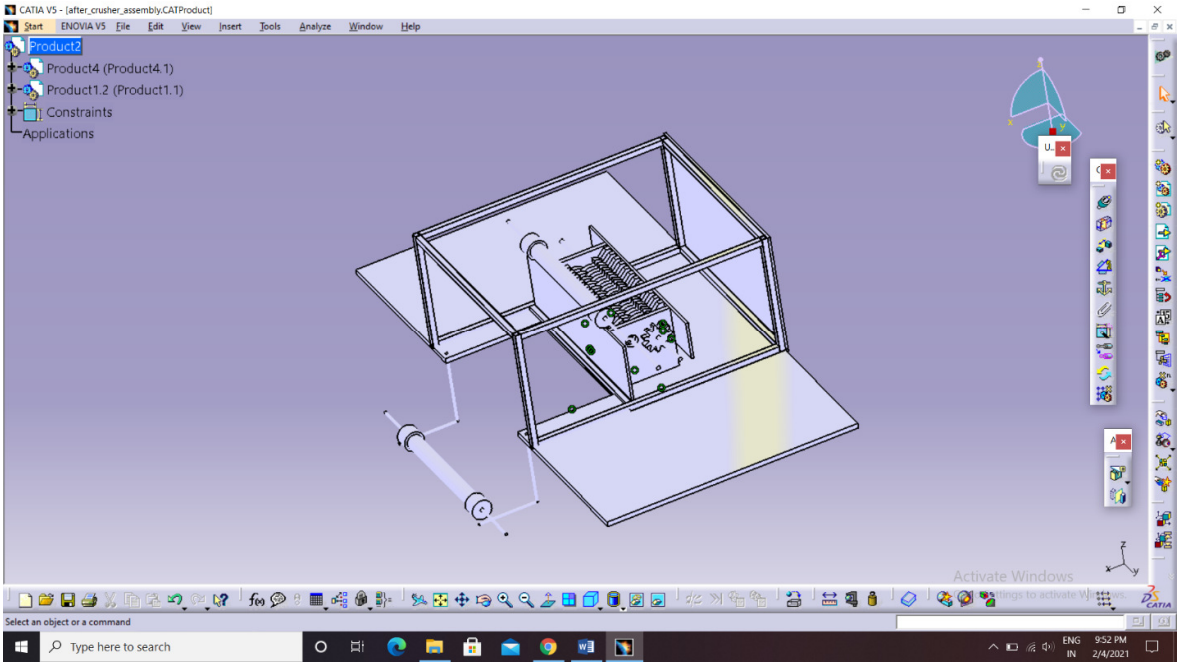
CATIA V5 - [after_crusher_assembly.CATProduct]
Start
ENOVIA V5
File
Edit
View
Insert
Tools
Analyze
Window
Help
Product2
Product4 (Product4.1)
Product1.2 (Product1.1)
Constraints
Applications
Activate Windows
Select an object or a command
Type here to search
ENG
IN
9:52 PM
2/4/2021

4. Production and Testing

After the design was finalized, production of individual parts was started.
First the chassis was prepared. The material used was steel. Then the body panels of wood were fitted over the chassis.
Note: *We are aware of the fact that wood is not the best material for water related operations. However we had a lot of cost, size and weight limitations. Under the given situations, wood was the material that was suitable. To protect the wood from water action, we have painted it with layers of paint and protection coats. We believe that when this prototype will be further converted to actual industrial product, more suitable material will be used*.
After the body was complete, the major assemblies were produced. The conveyer mechanism was produced. For this mechanism, chain drive mechanism is used in an inclined plane. The crusher assembly is purely manufactured using 3D printing technology. Finally all the electronics to drive the mechanisms was fitted.

Apart from these phases, we were concurrently in contact with the school students. They were updated about the progress of the project. We educated the students regarding all the basics of the project. First we explained them the background for selecting the project, awareness about water pollution, plastic and its disadvantages, how it adversely affects the ecological balance was taught to them.
Information about the actual prototype, its design, how it was manufactured, basics about the sub-assemblies and electronics were taught.

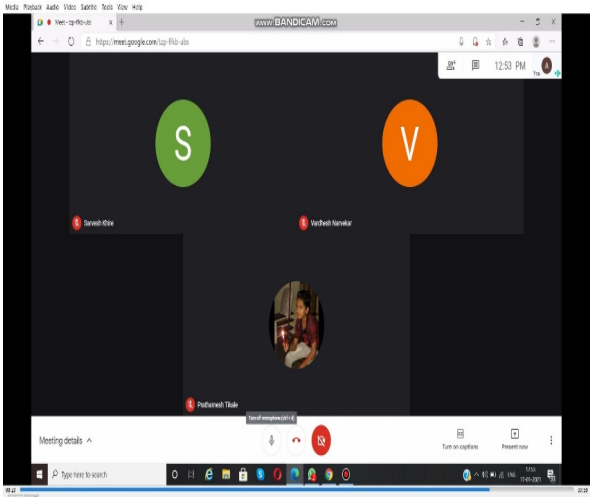
S
V
Meeting details

CONCLUSION

In conclusion, our prototype will be a first step towards achieving the goal set and eventually solve the problem from its roots. The prototype is able to collect and crush the water surface plastic and will be gathering samples of water from various locations. This prototype is well suited to work on small water reservoirs like lakes, small rivers. However we have large scale plans for the project. This model can certainly be converted into a large scale product which will be used on all types of water reservoirs including large rivers and oceans. Further large scale implications include complete solar powered operation. The samples collected can be instantly subjected to basic water tests like pH and hardness level and chemical impurities. The data obtained will be directly uploaded to a cloud server. The data will be made available for various institutes for further study. It can be used to keep track underwater life.

This project can be a huge step in water sanitation project and will prove to be an aid in solving the drinking water crisis. As the world moving towards creation of smart cities due to enormous growth in the population and advancement the technology it becomes most important to control water cleaning through efficient method.

2. Automated E-Waste Disposal Using Machine Learning

COLLEGE	VIVA Institute Of Technology
GUIDE	Prof. ShoebShaikh
COLLEGE STUDENTS	TanviAswani, GovindNaik
SCHOOL STUDENTS	KartikiNaik, SakshamRaut
SCHOOL	Utkarsha Vidyalaya, Virar

I. Abstract:

Automated e-scrapper machine can be controlled by any individual user where user is going to feed the waste in feeding section a camera placed above feeding section will take the picture of that object and will decide whether the object should be recycled, scrapped or should be disposed directly based on the decision the object is stored in respective bin. The machine will take decision using ML algorithm trained on previously collected data. And all other mechanical work is done by servo motors.

ML model can be trained on large amount of data so it can classify variety of object which normal sensors cannot do. As we are using ML to classify object it will reduce human labour required to scrap the waste or sensors required as ML model can be copied and used multiple times. Once trained it just requires only one type of sensor which is camera and this ML model can be trained on various other dataset to perform necessary tasks as per requirements.

Managing plastic waste has become a critical part of our discourse on waste management, and that's a positive thing.
But what about the e-waste? It must also enter that critical conversation as it contains heavy metals and toxic chemicals like mercury, lead, and sulphur that pose a real danger to our environment.

The motive of creating this is to reduce:

"Direct contact of harmful materials such as lead, cadmium, chromium, brominated flame retardants or polychlorinated biphenyls (PCBs) and exposure to toxic fumes which causes serious health hazards. Toxic chemicals and heavy metals leaching into soil and water causes pollution, while toxic fumes reach into the environment and cause air pollution.

The Sustainable Development Goals that we are solving here are:

- SDG 3: Good Health and Well Being
- SDG 11: Sustainable cities and Communities
- SDG 12: Responsible Consumption and production

II. Block Diagram:

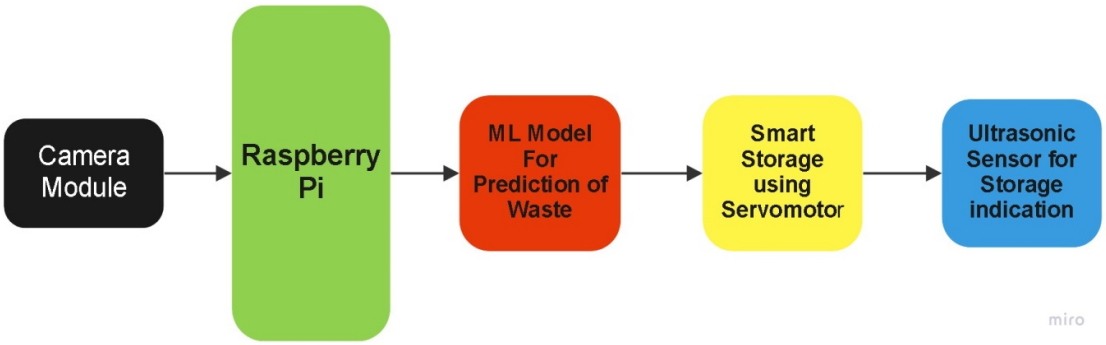

III. Expected Result:

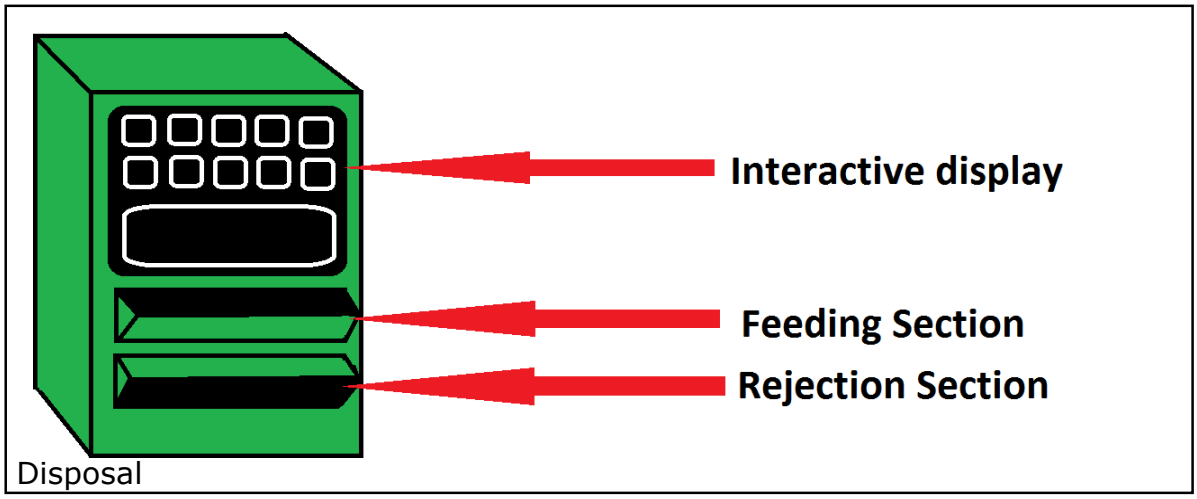

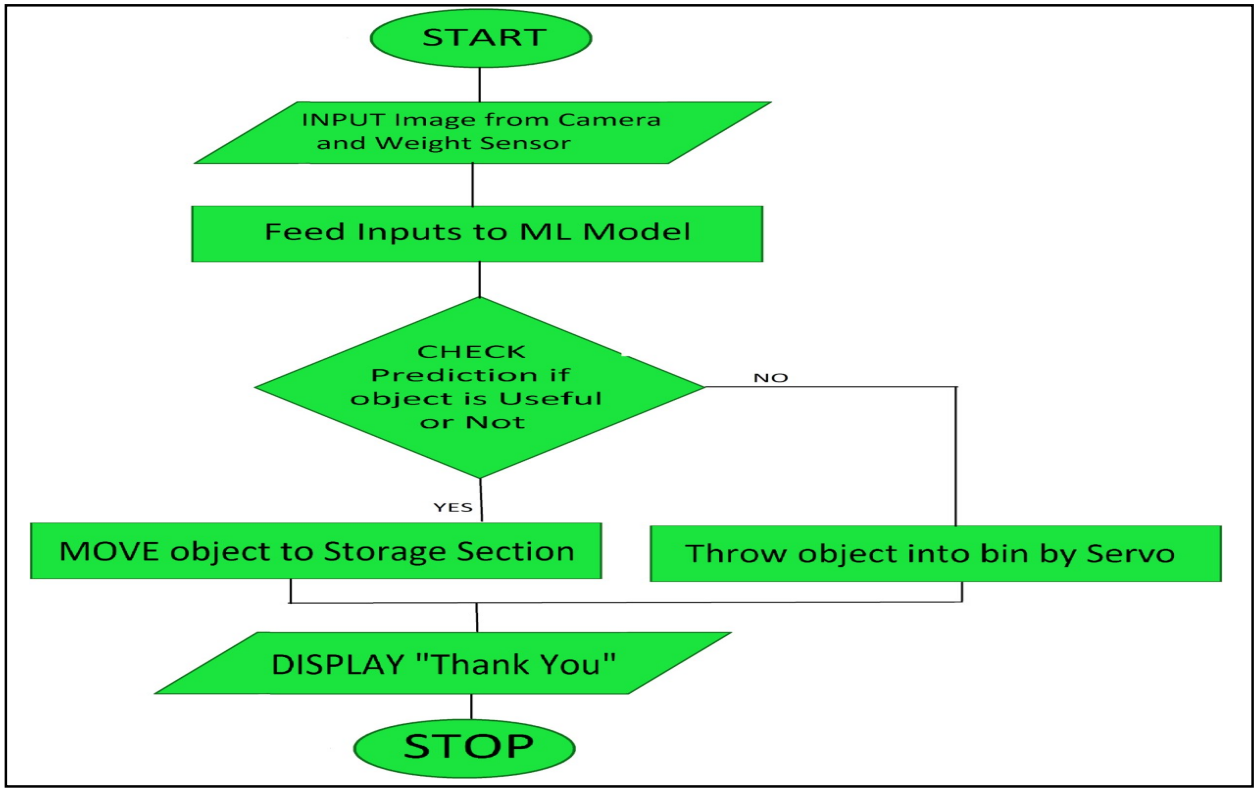

❑ Display:
The display used in the project will let users interact with the machine so they can identify or choose from the dataset the type of waste they are going to dump into the machine

❑ Feedingsection:
This is the section where users will insert the objects that they want to dump into the machine

❑ Rejectionsection:
If the object dumped by the users is not reusable or recyclable then it is thrown out by this section.

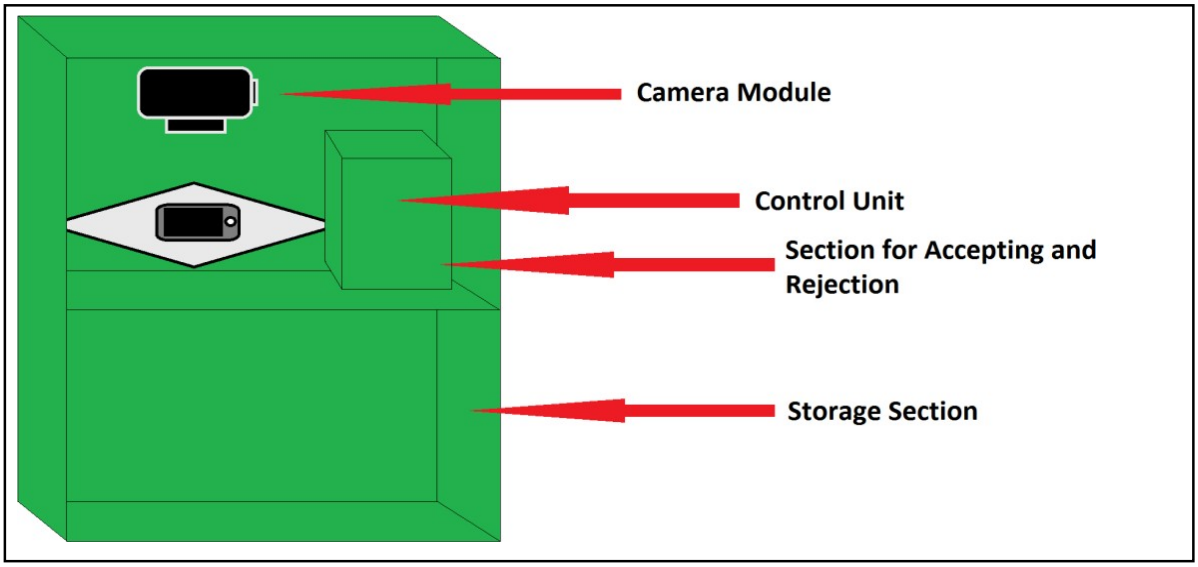

Fig No.04: Working Diagram of Automated E-waste Disposal

- Users will insert the gadgets that they want to dump into the machine through the feedingsection.
- The display used in the project will let users interact with the machine so they can identify or choose from the dataset the type of waste they are going to dump into the machine
- The object will go in front of the camera and it will take a picture of the inserted object
- Processing unit which is raspberry pi will feed that image taken by camera to pre-trained ML models.
- ML model will predict what is the object and will it be worth savaging as E-waste then give the result.
- Based on the result given by the model object is stored in the storage section or rejected and thrown out by rejection section.

- The input from the weight sensor with the camera will be used to get more accurate predictions.

I. PHOTOGRAPH OF STUDENTS LEARNING:

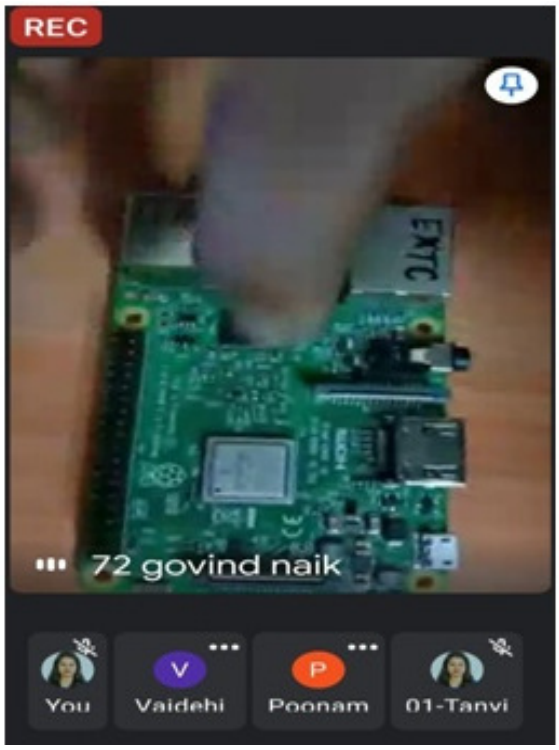

II. BENEFITS:

i. Reusing the waste: Less manual work will be required for salvaging valuable materials and electronics parts for reuse

ii. Reduces large amount of E-waste generated every year and disposed by incorrect method.

iii. Recycling the waste: There will be decrease in e-waste generation to recycling ratio.

iv. Increase social awareness.

v. Good governance.

vi. Builds Sustainable environment.

vii. Safety and security of citizens

viii. Health and education.

ix. Eco-friendly

x. Efficient

xi. Conserves natural resources: Reduces the load on natural resources because the raw material required for the production of new products is extracted from E-waste rather than mining it from earth's crust.

xii. It creates the job for professional recyclers.

VIII. SUMMARY:

E-waste is a huge problem in India. The hazardous nature of e-waste is one of the rapidly growing environmental problems of the world. The ever-increasing amount of e-waste associated with the lack of awareness and appropriate skill is deepening the problem. With COVID-19 outbreak which kept people indoors and ON devices, the usage of electronics has increased tremendously. This increased use of electrical and electronic equipment coupled with a huge population and changing consumption pattern is generating waste at an alarming rate in India. This is due to the advancement or development in technology. These spectacular developments in modern times have undoubtedly enhanced the quality of our lives. At the same time, these have led to manifold problems including the problem of massive amounts of hazardous waste and other wastes generated from electric products. These hazardous and other wastes pose a great threat to the human health and environment.

- India is 3rd largest e-waste generator in the world after China and USA.

- India generates about 3 million tons of e-waste annually and ranks third among e-waste producing countries, after China and the United States.
- Reports state that it might rise to 5 million tons by 2021.

IX. Cost of the project/Model: Approx.₹3,500/-

3. Automated Sea Bin

COLLEGE	VIVA Institute of Technology Shirgaon, Virar (East), Dist: Palghar-401305, Maharashtra
GUIDE	Prof. NutanMalekar
COLLEGE STUDENTS	ReethikThota, AakashTripathi
SCHOOL STUDENTS	DakshitKijbile, ParthVartak

i. Abstract:

The Automated Sea Bin will float on water and can be controlled by any individual to collect all the waste that is there in the water. It will be in the form of an online game and the users will get points on the amount of waste material that they collect. A live feed will be provided of the bin in real-time in a first-person view to make it intuitive. This will create awareness among the society about the waste issue that we all are facing and they can help in the betterment of the society while they enjoy doing so as if they are playing a game.

These "Sea Bins" can be set wherever there is need and are really easy to be set up with no need of any modifications or tinkering with anything. These suck water in, thus trapping all the plastics in it and sending a notification once full, saving the environment of these harmful things and saving lives of the fishes, corals & humans too.

The motive of creating the sea bin is to rid all the water bodies with the wastes generally for ponds, lakes, rivers, seashore, etc.

The Sustainable Development Goals that we are solving here are:

- SDG 3 : Good Health and Well Being
- SDG 6 : Clean Water and Sanitization
- SDG 11: Sustainable cities and Communities
- SDG 12: Responsible Consumption and production
- SDG 14: Life below Water

ii. BlockDiagram

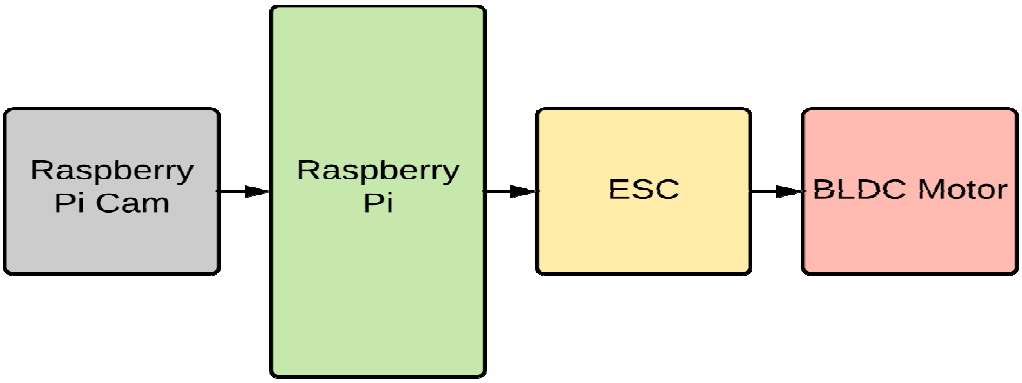

Fig. 1: Block Diagram of Proposed Automated Sea Bin

iv. Method

1. Raspberry Pi Cam provides the live feed of whatever the automated sea bin see's, it provides it with the least delay that's possible. The videos can be streamed anywhere and the bin can be controlled from anywhere.

2. The control actions are sent to the Raspberry single board computer to be processed and to control the direction and speed of the bin

3. The commands sent from the Raspberry are then analyzed by the Electronic speed controlled and the signals are sent to the BLDC Motor's.

4. BLDC Motor

They are the final link in the whole process and they finally provide with the desired output based on the user's input and collects all the waste in water according to it.

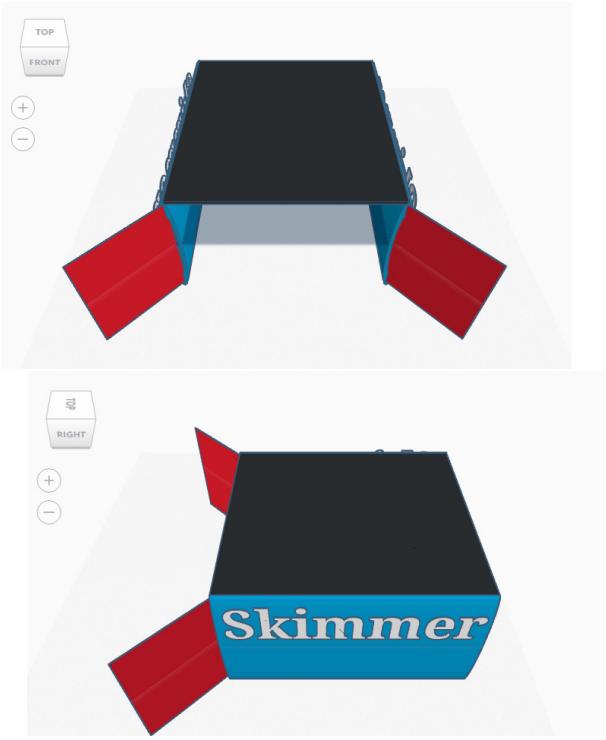

Fig. 2: 3D image of the Proposed Automated Sea Bin

iv. Photo with Students:

v. Benefits:

i. to rid the waters off of waste.

ii. to improve water quality.

iii. to improve the flora and fauna.

iv. reusing the waste.

v. recycling the waste.

vi. increase social awareness.

vii. good governance.

viii. sustainable environment.

ix. safety and security of citizens, particularly women, children and the elderly.

x. health and education.

vi. Summary:

The total populace is developing and way of life desires are ascending also, so the world's pace of utilization is developing exponentially. More utilization implies more waste. Populace development additionally implies that mankind's regular habitat (the land) is getting progressively scant, so we are progressively seeking the ocean for food security (and even as a spot to live).

The difficult that we're making for ourselves is that non-biodegradable waste gets into the natural way of life, and renders the earth unequipped for supporting life.Aggravating the issue: squander in global waters is no one's immediate responsibility.

The arrangement isn't to stop or confine financial action – to do so is to limit advancement, which is our best weapon against the devilish issues that we face today. Or maybe, we ought to be getting our loss before tide, wind and flows do it to the vast sea.

vii. Costoftheproject/Model:-Approx.₹7,000-10,000/-

4. BRIDGE MONITORING SYSTEM USING IOT

COLLEGE	SIES GRADUATE SCHOOL OF TECHNOLOGY
GUIDE	MS. LEENA LADGE
COLLEGE STUDENTS	POOJA SHETTY, S. ANANTHASELVI
SCHOOL STUDENTS	VAISHNAVI DEVALE, ARCHANA
SCHOOL	SHRI SAMARTH VIDYALAYA

ABSTRACT

Bridge monitoring system is a system for health diagnosis of bridges and flyovers. With the help of advancements in sensor technology, we have developed an automated real-time bridge health monitoring system. This system will help in the prevention of disaster management and recovery. By the use of wireless sensor nodes, various types of data can be collected like vibration, water-level, bridge weight and tilt of the bridge. These data would also be useful for monitoring and surveillance. The main objective of this project is to develop a system that can prevent accidents or structural disasters of flyovers and bridges. In case of emergency situations the gates of the Bridge will be automatically closed. The obtained data are transmitted to the server and database for admins to have real-time monitoring of the bridge conditions via website.

PLANNING OF WORK /PROCESS

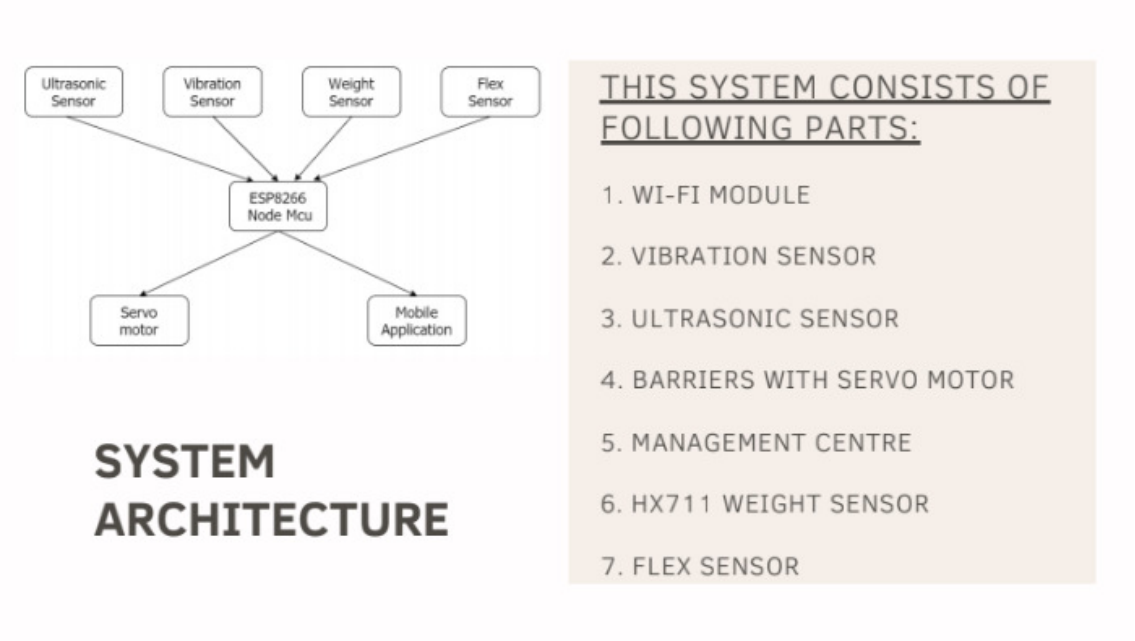

METHOD

The system consists of a vibration sensor to detect the vibrations of the support beams of the bridge. So, if at any given situation, the bridge condition is not good or about to fall, it will be detected by this sensor. The flex sensor is used here to detect if there is any bending or tiltness in the bridge. The weight sensor is used to measure the current weight present on the bridge. For detecting the water level of the river beneath the bridge and to find if the level is rising ,here HC-SR04 Ultrasonic Range Finder Distance Sensor is used. The Ultrasonic sensor works on the principle of SONAR and is designed to measure the distance using ultrasonic waves to determine the distance of an object from the sensor. If any of the above sensors exceeds the given threshold value, the servo motors present at the barriers of the bridge will be activated and the gates will be closed. All the sensors are connected to Arduino UNO, which processes and saves data. The system also has a wifi feature, which is useful to access the system and its data over IOT. So, the government officials will be able to monitor the bridge using a website by just sitting at their office.

PHOTOGRAPH OF PARTLY PREPARED PROJECT MODEL

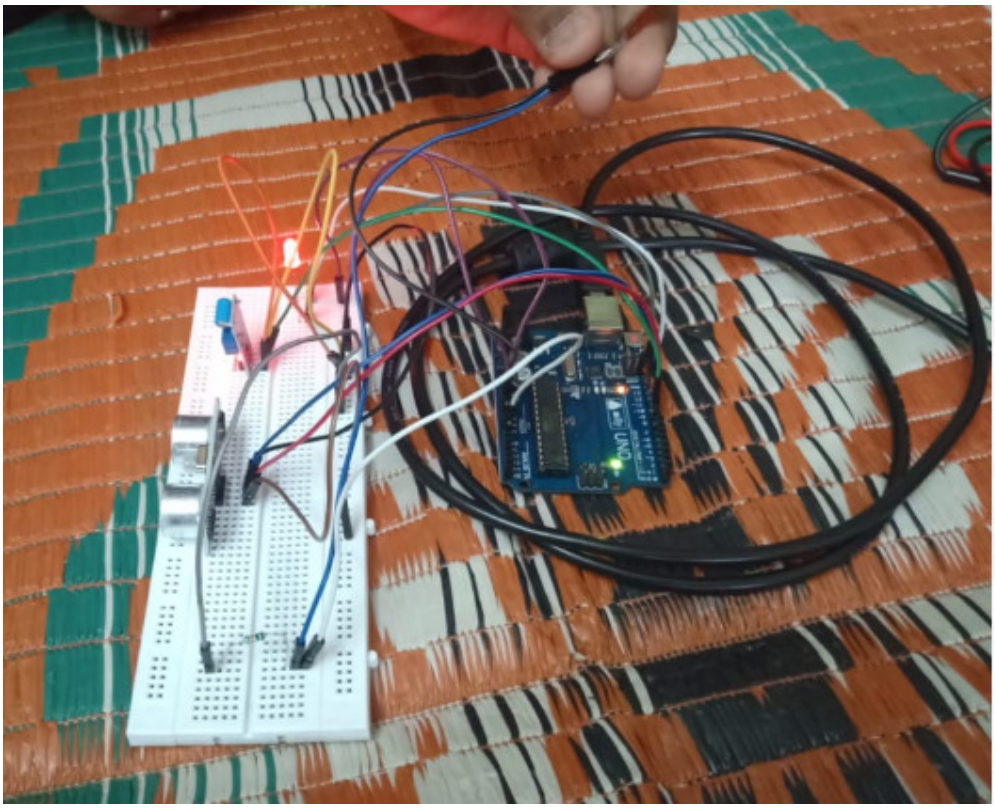

BENEFITS

The benefits of this project include the following:

- This system checks the water level and the position of bridge for safety purpose. In the emergency conditions like earthquake, flood, etc. the facility of broadcasting the message is added.
- This System is unique in its ability to monitor the bridge environment, it transmits environmental data through wireless communication and sends alerts to the bridge management staff i.e. Monitoring Centre in real time for prompt action.
- The main objective of Bridge Monitoring System using IOT is to save the lives of the people, to protect from accident.

SUMMARY

Even in developed nations like USA, it has been found that more than one out of every four bridges are structurally deficient This IOT technology could avert the kind of bridge collapse that killed 13 and injured 145 along Minneapolis on Aug. 1, 2007 at one-hundredth the cost of current wired systems This system can help in monitoring the bridge in an efficient, cost effective and reliable manner

COST

The total cost of this project is rupees 1500/-

5. COVID PATIENT REMOTE HEALTH MONITORING SYSTEM

COLLEGE	Sanghavi college of engineering,Nashik
GUIDE	Prof.Mr.R. R.Purkar
COLLEGE STUDENTS	AratiS.Purkar, NehaS.Jadhav
SCHOOL STUDENTS	IndrayaniR.Wadghule,AdityaB.Jadhav
SCHOOL	SaraswatividyalayaNiphad,Modernenglish school Naitale

ABSTRACT

This paper proposed a "Covid Patient remote health monitoring system",The independent, convenient and healthy living is the aim of any human being.The remote health monitoring system have evolved to assist convenient healthy living,more accessible communication between healthcare givers and patients for close monitoring,measurement of vital health parameters,routing consultation and overall healthy living.

The "Covid patient remote health monitoring system",is an system in which the device has non-invasive sensors to measure the main health parameters like temperature,SPO2,Heart rate,etc.of the covid 19

patients.The solution aims significantly reduce the risk of exposure in health care workers.We can develop this system at homes,hospitals or remote areas also.Therefore patients get the right service at right time and doctor's,health operators can also give the right treatment along with safety.This will help reduce the mortality rate of covid patients.

PLANNING OF WORK /PROCESS

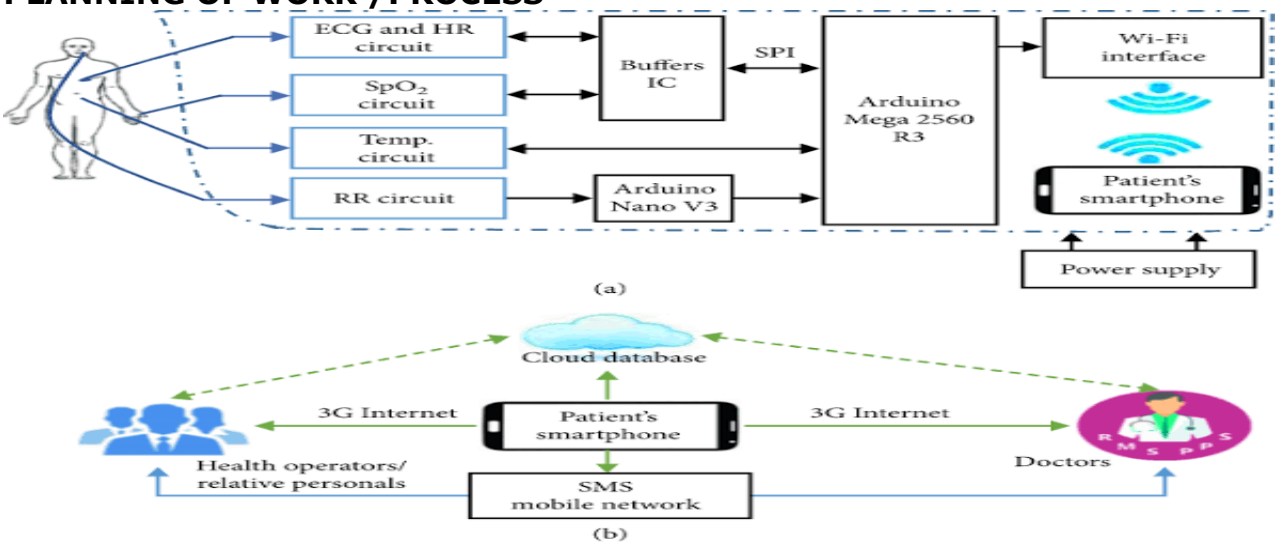

METHOD

In remote monitoring,the medical professional monitors the emergency cases of patients remotely,as well as provides real time data analysis and instant feedback to patients.

Once the user activates the patient monitor,information is collected,stored on internal system,and formatted for transmission to patients healthcare operators.The data is collected then transmitted to the healthcare facility through the Internet.The internal programming software and healthcare professional will examine the data and indicate any areas of concern.Information regarding these concerns is then sent back to the patient or patients healthcare team.The physician finds a discontinuity in the data that requires immediate attention,alerts will be sent to designated emergency responders.An emergency medical team will provide immediate assistance to the patient and will even explain what happened and ways to prevent another similar incident in the future.

Now we start the monitoring,firstly set up the menu as an up and down.Fore.g.,for the heart beat set the menu as 100 per minute.Doctors , health operators also change this setting as per requirements as an case above or below.Now start monitoring,through remote health monitoring

system monitor the heat beats and this data send to doctors,health operators through Website afterwords they can treat the patient.Repeat the same procedure for measuring temperature,SPO2.

PHOTOGRAPH OF STUDENTS LEARNING THROUGH ONLINE LECTURES

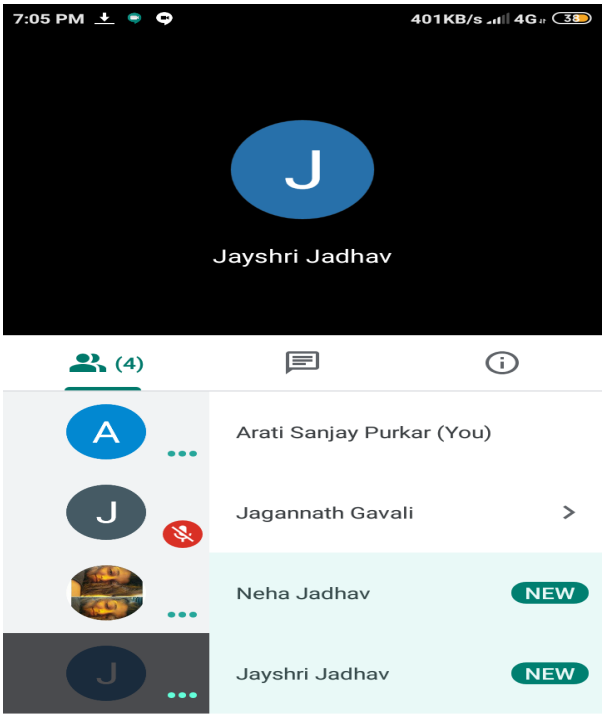

BENEFITS

Covid patient remote health monitoring system benefits include the following:

- Improves patients lifestyle also improved quality of care.
- Allows sending data from patients to health professionals in real time.
- Makes healthcare more available and better access to healthcare.
- The covid patient remote health monitoring system increase the capacity for physicians to treat more patients and also increase patient comfort.

- Peace of mind and daily assurance.Comfortable and familiar to patients.

SUMMARY

The "COVID PATIENT REMOTE HEALTH MONITORING SYSTEM",study shows that; the corona disease is on the rise among the people.This is serious concern due to lack of adequate facilities and excessive expenditure.But now remote health monitoring system will help to treat covid 19 patients and the treatment will be done at the right time.

It will also help the doctors,health operators to proper treatment.From this system it will be possible to measure health parameters like temperature,SPO2,heart rate, etc.a t the same time and this information will reach the doctors,healthoperator's.We can propose this project in hospitals,homes as well as in remote areas.This will help to reduce the mortality rate of covid patients.

COST

The total cost of this project is rupees 2800/-

6. Covid-19 Fighting Bot

COLLEGE	SIES Graduate School of Technology
GUIDE	Mrs. PranitaYogeshMahajan
COLLEGE STUDENTS	Vaibhav Singh, Vikrant Singh
SCHOOL STUDENTS	Pratikshalaxmangole, Tanuja Rajesh kakade
SCHOOL	S.S.V. madhyamicvidhyalayghot

ABSTRACT

Since the discovery of the Coronavirus (nCOV-19), it has become a global pandemic. At the same time, it has been a great challenge to hospitals or healthcare staff to manage the flow of the high number of cases. Especially in remote areas, it is becoming more difficult to consult a medical specialist when the immediate hit of the epidemic has occurred. Thus, it becomes obvious that if effectively designed and deployed chatbot can help patients living in remote areas by promoting preventive measures, virus updates, and reducing psychological damage caused by isolation and fear. Artificial intelligence (AI) chatbot for the purpose of diagnostic evaluation and recommending immediate measures when patients are exposed to nCOV-19. In addition, presenting a virtual assistant can also measure the infection severity and connects with registered doctors when symptoms become serious.

Chatbots, if effectively designed and deployed, could help us by sharing up-to-date information quickly, encouraging desired health impacting behaviours, and lessening the psychological damage caused by fear and isolation. Despite this potential, the risk of amplifying misinformation and the lack of prior effectiveness research is cause for concern. Immediate collaborations between healthcare workers, companies, academics and governments are merited and may aid future pandemic preparedness efforts.

BLOCK DIAGRAM

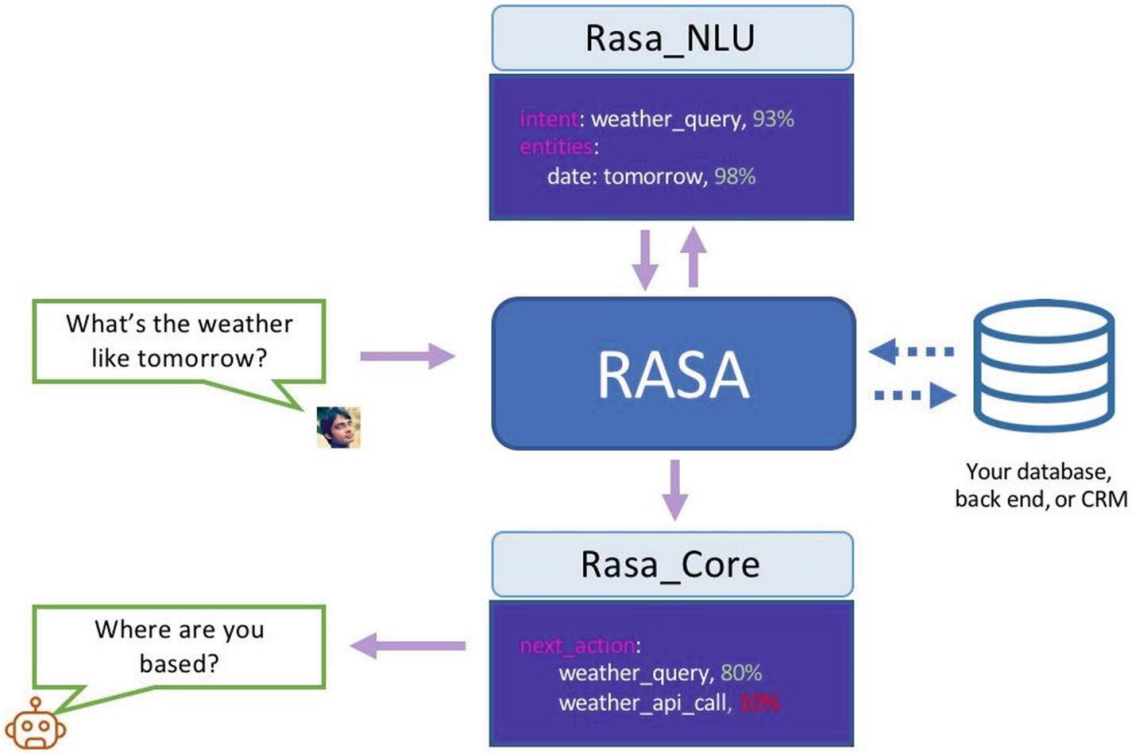

METHOD

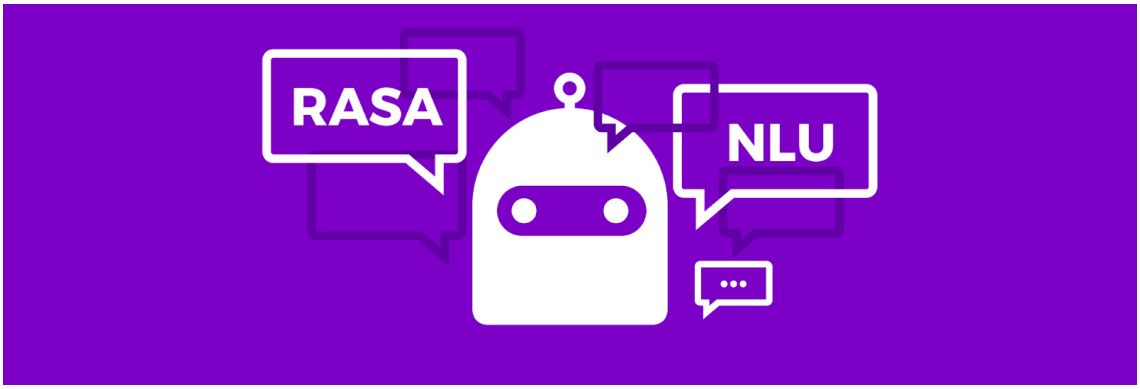

Rasa is a framework for developing AI powered, industrial grade chatbots. It's incredibly powerful, and is used by developers worldwide to create chatbots and contextual assistants.

We have used Rasa for creating the bot which uses NLP and ML to understand the language and effectively answer the queries. Rasa's NLU provides developers with the technology to understand messages, determine intent, and capture key contextual information. Supports multiple languages, single and multiple intents. Assistants built on Rasa can hold meaningful conversations with users - multi-step conversations that remember context and integrate business logic. Rasa learns interactively from real conversations - no state machines.

RASA open-source framework includes the following components:

1.RASA NLU (Natural Language Understanding)

This part of the framework is the tool/library for intent classification and entity extraction from the query text. The entities and intents further enable response retrieval and composition of the utterance text.

2. RASA Core

This component is the dialogue engine for the framework and helps in building more complex AI assistants that are capable of handling context (previous queries and responses in the conversation) while responding.

3.Channels and Integrations

These components let you connect and deploy your bot on popular messaging platforms. You can read more about these here. These help the developers in focusing more on the bot functionalities and less on the plumbing required to deploy it in the real world.

BENEFITS

Benefits of the project are the following:

- Voice-Text Bot for personal assistant.
- language (Hindi) as option for conversation.
- can be integrated on website or app, common messaging apps, or create a custom channel.
- easy to access from a range of devices (online computer, smart phone, or analogue phone in some cases).
- available 24/7.
- More than millions of people round the globe can interact at a time.
- Doesn't require any maintenance.

SUMMARY

Rumours, myths and misinformation about COVID-19 have been spreading as quickly as the virus itself. This project of a Voice-Text Bot will provide quick assistance and guidance to all in accordance to United Nations Sustainable Development Goal of health and well-being. The project provides a personal assistant, who will not just provide valuable updates but also guide the user towards his health and needs through answering users FAQ's along with Facility finder and real time statistics (in native language i.e., Hindi).

COST

The total cost of this project is rupees 000/-.

PHOTOGRAPH OF STUDENTS LEARNING

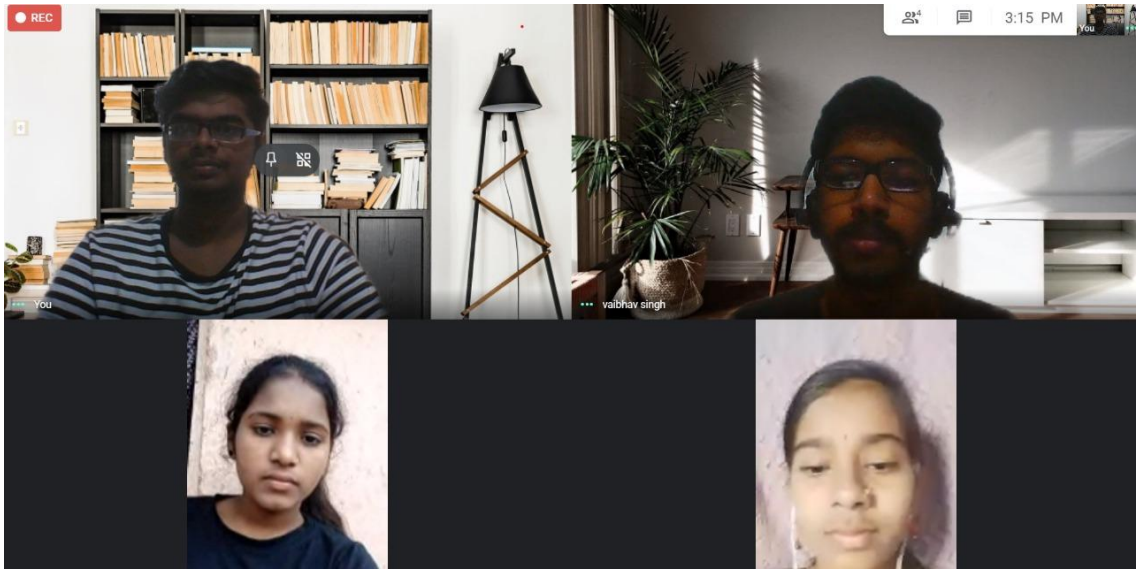

7. IOT based Smart Sanitizer

COLLEGE	LokmanyaTilak College of Engineering, Navi Mumbai
GUIDE	Mr. MohdFarhan
COLLEGE STUDENTS	ChetanKandarkar, Monish Soni, MiteshVaidya, SarveshShukla
SCHOOL STUDENTS	HarshalPatil, MayureshJadhav, JayeshChandanshive
SCHOOL	R. J. Thakur Vidyamandir, Thane Municipal School No. 70, Mumbra

ABSTRACT

COVID-19 is creating havoc in the world. The transmission of the disease was viewed as spread through person-to-person that make it easily diffuse. The infection spreading starts from the infective droplets during sneezing or coughing. In order to reduce the spread of coronavirus, any contacts between people and potential carriers of the virus have to be limited. In current circumstances, social distancing and constant disinfection of public places become a necessity. Though, nowadays it is essential to sanitize hands, touching the same bottle surface already used by someone may increase the risk of contamination. So, we have designed

a smart touchless hand sanitizer-dispensing system using Iot. It also has feature such as auto refilling to reduce human labour and also possess alarm to remind person to sanitize hand before entering the premises and also keeps count of persons to monitor the no of persons present in the premises.

BLOCK DIAGRAM

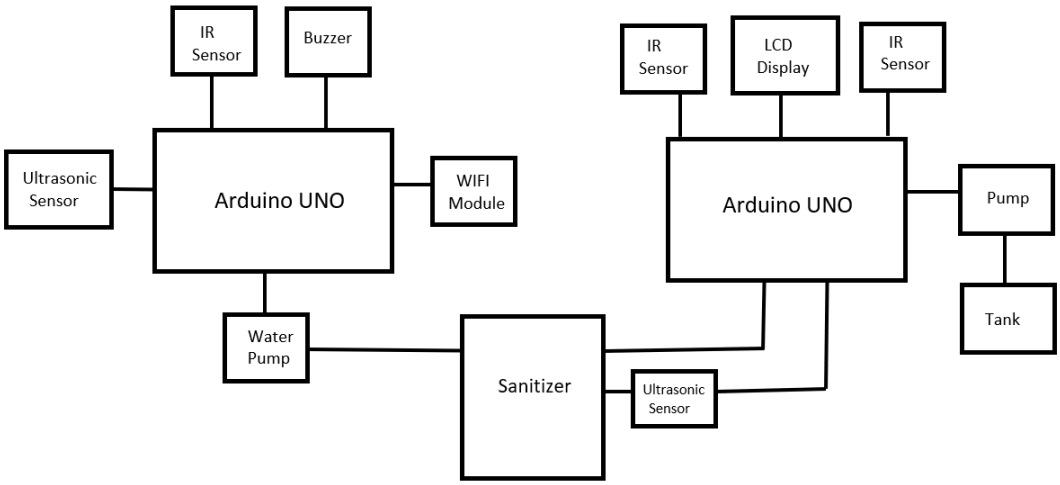

PICTURE OF MODEL

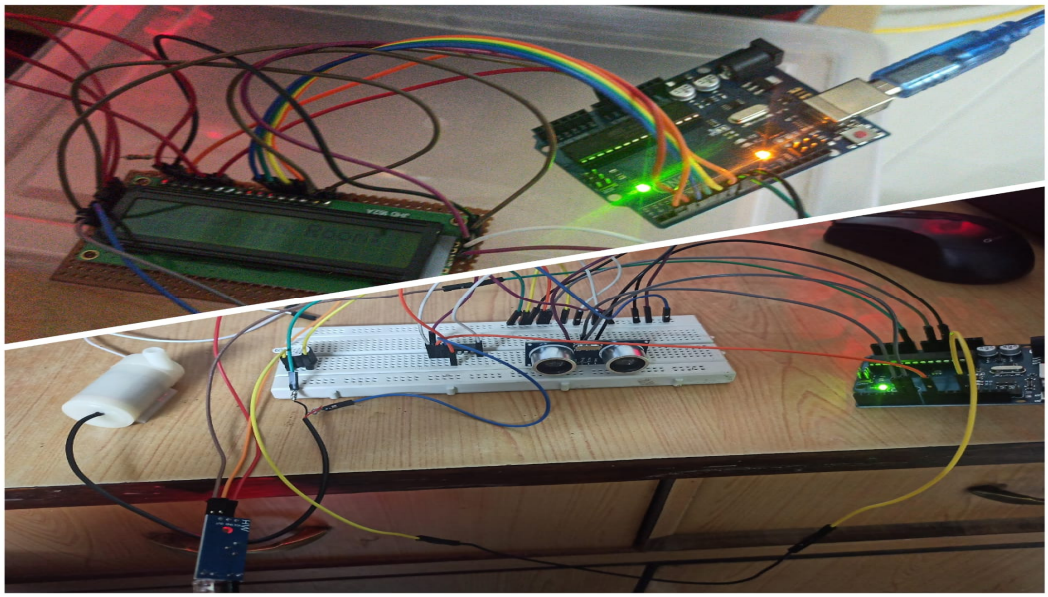

METHOD

In this project we have make an automatic hand sanitizer using Arduino and other components. In that we have also added the alert system which we have created using ultrasonic and IR sensor. When the count of ultrasonic sensor which detects the persons hand and pours the sanitizer liquid if that ultrasonic sensor count is less than the IR sensor then with the help of buzzer it will alert the person to sanitize first then enter the premises. We have also made a counting system which keeps the count of people present that are present in building or premises. We have also added an automatic tank filling system which will help sanitizer to refill on its own from secondary container to the main container. In that with the help of ultrasonic sensor it will detect the sanitizer level in main tank and at certain level it pulls the water with the help of mini pump from secondary to main container.

PHOTOGRAPH OF STUDENTS LEARNING

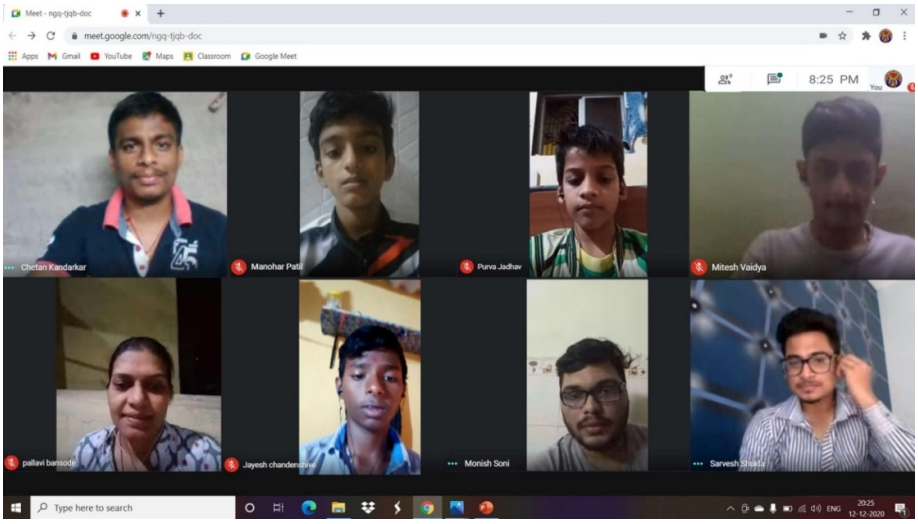

BENEFITS

- It provides touch less sanitization.
- No labour required for refilling and monitoring.
- Give alerts to person to sanitize.
- Keeps count of people present in the building.
- Cheap and durable.

CONCLUSION

This project will make smart touchless hand sanitizer system with auto refilling feature to reduce human labour and also possess alarm to remind person to sanitize hand before entering the premises. It also keeps count of persons to monitor the no of persons present in the premises. In current Circumstances, social distancing and constant disinfection of Public

places become a necessity. So, this Project will be very useful to use in hospitals, bank, mall and many public places.

COLLEGE	SIES GRADUATE SCHOOL OF TECHNOLOGY, NERUL
GUIDE	Dr.PradipPatil
COLLEGE STUDENTS	HariprasadIyer , DishaBudage
SCHOOL STUDENTS	AishwaryaShirke , VedantGosavi
SCHOOL	ADARSH VIDYALAYA, SIDDHART NAGAR,GOREGAON(WEST),MUMBAI 400104

COST
The total cost of this project is rupees 4000/-

8. LIVE ACTION PROSTHETIC LEG

INTRODUCTION

A prosthesis or prosthetic implant is an artificial device that replaces a missing body part, which may be lost through trauma, disease, or a condition present at birth (congenital disorder). Prostheses are intended to restore the normal functions of the missing body part.Prostheses can be created by hand or with computer-aided design (CAD), and through various analyses based software's.

Thousands of lower limb amputations are carried out around the world every year due to complications of diabetes, circulatory and vascular disease, trauma, or cancer. The amputation process is one of the methods when reconstruction surgery cannot provide an adequate solution or the injury to the limb is too severe to recover. The lower limb amputation results loss in mobility of individuals which degrades the quality of amputees' life and lack in Functional performance to maintain their activities of daily livings.

After the amputation was performed the most important goal of healthcare provider must be focused on amputee's return to his/her routine activities of daily living in the shortest period of time. After the recovery of a subject, a prosthetic leg is an essential assistive device to recover some of missing locomotion functions.

During rehabilitation process, the physician assesses the amputee potential level of functional mobility and ability to use lower limb prosthesis and then classifies the lower limb amputees into a range of K-levels by providing a score (K0, K1, K2, K3, K4) .This classification classifies the Trans femoral amputees (TFA) from do not have the ability to ambulate safely without assistance (K0) to who exceeds basic ambulation skills and exhibits performance of high impact stress activities (K4).

This type of classification helps prosthetist/physician as guiding rules for prosthetics. Hence it is Important to have a prosthetic with proper functionality that serves its purpose without causing further psychological and physical harm to the patient.

MICROPROCESSOR POWERED PROSTHESIS

Even if properly fitted with conventional prosthesis, patients with lower limb amputation frequently report difficulties while walking or standing. To solve this, microprocessors are used.

The design of microprocessor prosthetic ankles (MPA) aims to mimic physiological ankle mobility, to enhance their adaptability to various situations. With the current technological advancement in machining and artificial intelligence, Microprocessors can accurately predict the walking gait cycle with the help of sensory response and dynamically adjust the damping in real time with motor control to provide comfort and an even stress distribution across the body. This not only improves the gait, but also reduces the chances of muscle based injury.

The following table shows the versatility of MPA's.

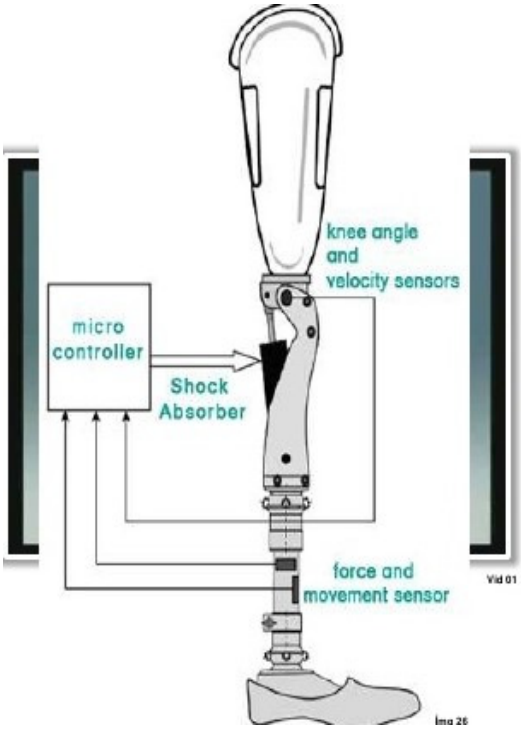

WORKING AND SENSORY RESPONSE IN MCP'S

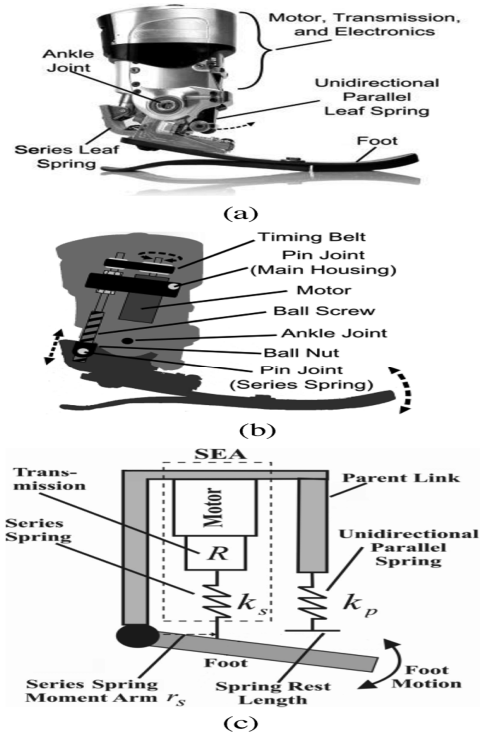

The on-board computer of the microprocessor knee collects data from two separate sensors within the prosthesis at a rate of 50 to 1000 times/s. The first set of sensors monitors the knee angle position, by taking repetitive readings of the knee flexion angle: The computer can determine if the knee is flexing or extending, or if the readings are constant, the computer determines if the knee is stationary. The second set of force sensors measures the amount of rotational stress or force applied below the knee during gait. During heel-strike, a plantar-flexion moment is applied to the foot, which creates an anterior rotational force, and conversely, toe-off creates a dorsiflexion moment that generates a posterior rotation force.

The data collected from the knee angle sensor and the force sensors are processed and analysed by the microprocessor continuous gait assessment function (also referred to as gait assessment algorithms).This function examines the data and determines if the knee angle position and forces applied about the knee or foot are within appropriate parameters for normal human gait. Based on the knee position and applied forces, the microprocessor can identify whether the wearer is in swing phase or stance phase. The system also can identify changes in Gait speed, determine if the wearer is on stairs, ramps, or uneven terrain; is stationary; or is taking an unnatural step and is about to fall or stumble. From the data collected by the sensors and the analysis of the information by the continuous gait assessment function, the microprocessor knee is able to adjust the knee function within 1/100 of a second to increase or decrease the knee resistance to ensure the knee is in the optimal stability and functional setting for the wearer at all times.

The angle of knee flexion is regulated to mimic the knee more closely during normal gait at varying walking speeds. This ability to change the fluid resistance automatically during gait enables the individual to mimic the normal human function of increased or decreased muscle contraction intensity .Gait is more natural. With the microprocessor knee, the wearer can maintain active control of the knee during stance phase. Microprocessor controlled knee joints have various control programs and sensors that continuously detect which part of the gait cycle the wearer is in and predicts when stance phase will be initiated. The computer system uses force sensors to assess the gait patterns at a rate of 50 to 1000 times/s and can make instantaneous adjustments to the knee action and resistance to flexion. When stance phase is initiated, the microprocessor ensures that resistance to knee flexion is high so that the knee does not collapse during stance phase. Security is enhanced by decreasing the risk of falling. Also, the need for physiologically unsound compensatory movements during walking is reduced. A microprocessor-controlled knee joint can detect movements that are not part of the normal gait pattern. It can activate a higher resistance to flexion, helping to prevent a fall and potential injury. In this way, the microprocessor-controlled knee joint can provide greater security and stability for the individuals on many different types of terrain and with activities of daily living.

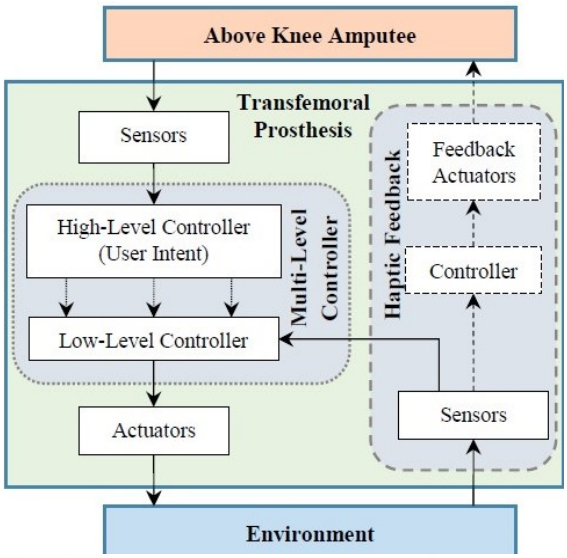

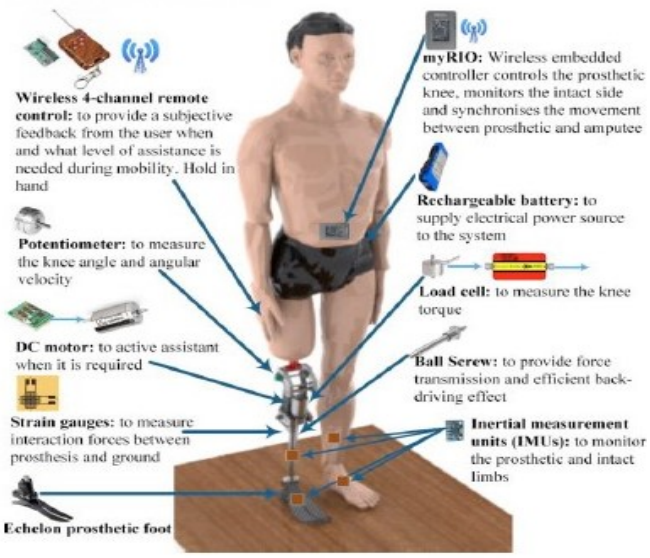

- <u>GAIT CYCLE</u>

The normal human pattern of gait is defined as a series of movements which form a coherent and energy-efficient motion which results in stable forward propulsion of the body. Gait occurs in different patterns, which are dependent on factors such as the speed of the locomotion which is required (walking or running).The normal gait cycle consists of two distinct phases (stance and swing) which, for the purposes of analysis, have been broken down into sub-phases. A single gait-cycle begins at the point at which the foot first touches the ground. When the same foot makes contact with the ground again a full cycle of gait is achieved. Trauma or disease processes can lead to changes in each of the sub-phases, leading to characteristic and distinct changes in the pattern of gait. An understanding of the gait cycle therefore forms an important part of the assessment of the lower limbs and can often give clues toward disease processes as the patient enters the consultation room.

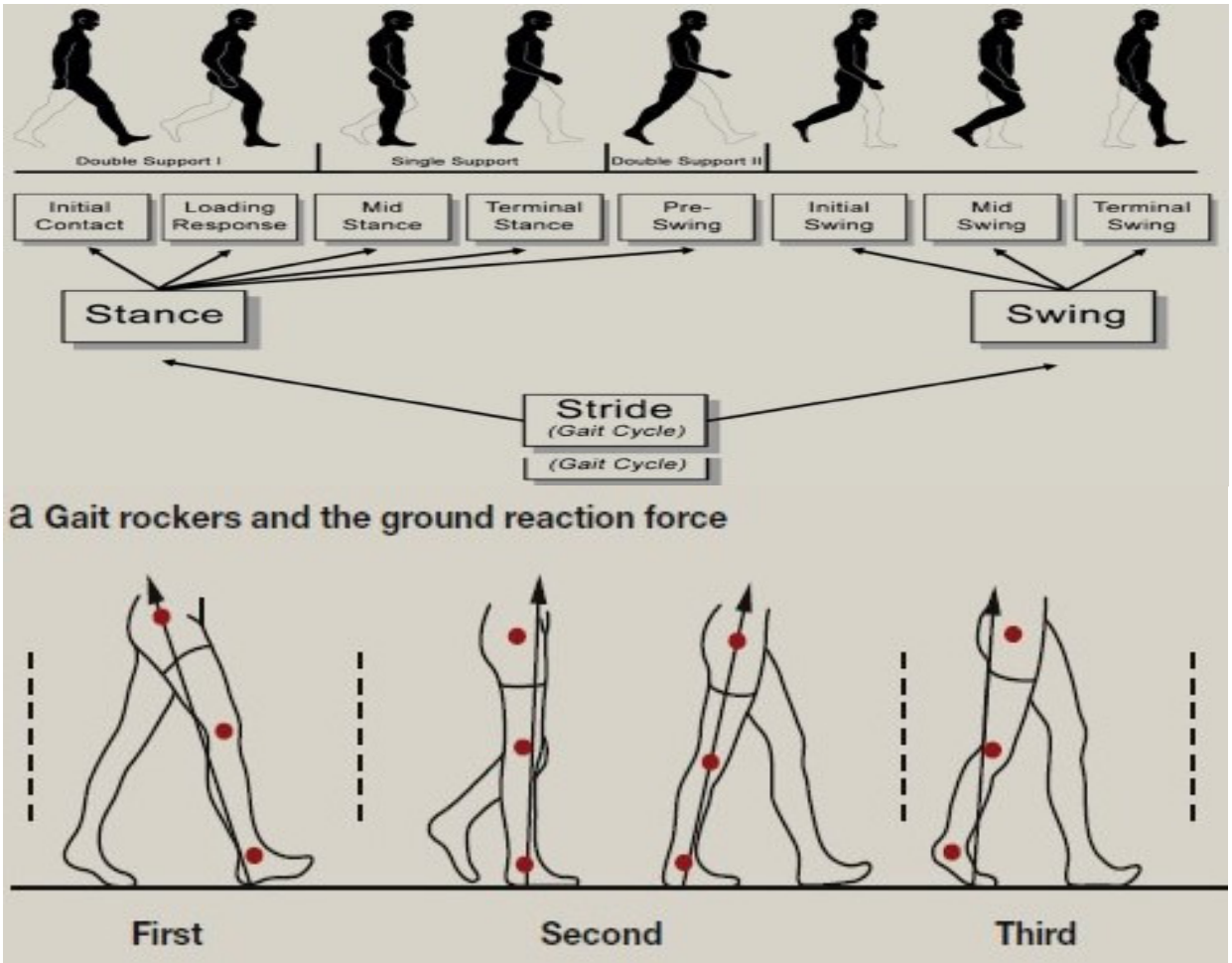

GROUND REACTION FORCE ESTIMATION

The model of the prosthetic leg is based on the standard robotics framework. Fig. 1 shows a diagram of the hip robot and prosthesis combination [17-18]. A general dynamic model for the system is given as follows:

$$D(q)\ddot{q} + C(q,\dot{q})\dot{q} + B(q,\ \dot{q}) + J_e{}^T\ F_e + g(q) = u \qquad (1)$$

where q^t = [q1 q2 q3 q4]is the vector of joint displacements (q1is vertical hip displacement, q2is thigh angle, q3 is knee angle, and q4is ankle angle), d(q) is the inertia matrix, C(q , q*is a matrix accounting for centripetal and Coriolis effects, B(q, q*) is a nonlinear damping vector, Jeis the kinematic Jacobian relative to the point of application of the external forces Fe, g(q) is the gravity vector, and uis the four-element vector of control signals . The kinematic and dynamic model of the robot / prosthesis combination is given in, where a mixed tracking / impedance controller based on passivity methods is designed. The control signals

consist of hip force, and thigh, knee, and ankle torques. As Fig. 1 shows, a triangular foot with two points of ground contact is assumed. It can be seen that horizontal and vertical GRFs are applied to the contact points at the toe and heel. The GRFs are denoted as Fxh, Fzh, Fxt, Fzt, which represent the horizontal and vertical GRFs at the heel and toe.

Thus, the external force vector Fein 1) is comprised of these four GRFs. We assume the robot walks along the X-axis. A treadmill is used to simulate the walking surface of the robot prosthesis system. The belt stiffness is modelled to calculate reaction forces during contact between the heel and toe with the belt. The GRFs are entirely determined by kinematics and are given as follows:

$$z_h = -0.11\sin(q_2 + q_3 + q_4 - 0.787) + l_3\sin(q_2 + q_3) + l_2\sin(q_2) + q_1 \quad (2)$$

$$z_t = 0.241\sin(q_2 + q_3 + q_4 + 0.787) + l_3\sin(q_2 + q_3) + l_2\sin(q_2) + q_1 \quad (3)$$

$$F_{zh} = -k_b\,(z_h - s_z)\left(\frac{1+\mathrm{sign}(z_h - s_z)}{2}\right) \quad (4)$$

$$F_{zt} = -k_b\,(z_t - s_z)\left(\frac{1+\mathrm{sign}(z_t - s_z)}{2}\right) \quad (5)$$

$$F_{xh} = \beta F_{zh} \quad (6)$$

$$F_{xt} = \beta\, F_{zt} \quad (7)$$

Where kbis the belt stiffness,Szis the treadmill standoff (the distance between the origin of the world coordinate system and the belt when the leg is fully extended), L2and L3are the lengths of link 2 (thigh) and link 3 (shank)

Respectively, and Bis the friction coefficient between the belt and the foot. The vertical positions of the toe and heel in the world coordinate system are shown in Fig. 1 as Ztand Zhrespectively. We thus have four states for the positions and four states for the velocities of the joint displacements. One of the main objectives of this research is to estimate the GRFs which comprise Fein (1). As a result, we need to augment the external forces to the state vector. The augmented state vector comprises the eight original states of the robot and the four GRFs and is given as follows:

$$x = [q_1\ q_2\ q_3\ q_4\ \dot{q}_1\ \dot{q}_2\ \dot{q}_3\ \dot{q}_4\ F_{xt}\ F_{zt}\ F_{xh}\ F_{zh}]^T \quad (8)$$

Although the forces are static functions of the states, they are treated here as external, independent inputs, and are therefore regarded as states to be estimated. Thus, the 12-element vector of (8) is the vector that is estimated by the state estimator.

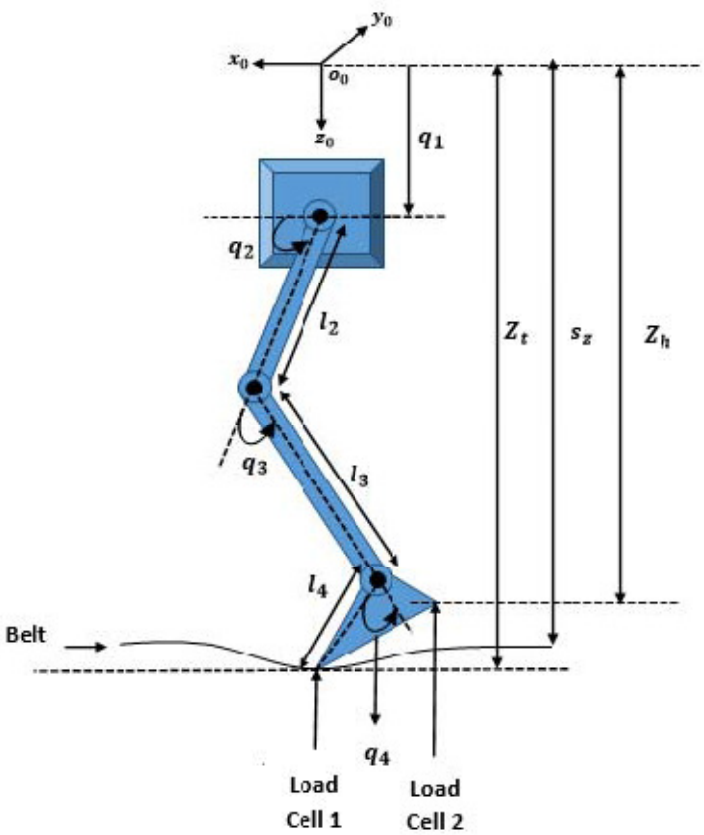

Fig. 1 The robotic model of prosthetic leg

The Kalman filter applies directly only to linear systems. However, we can linearize a nonlinear system and then use linear estimation techniques. Over the last few decades the extended Kalman filter (EKF) has become one of the most popular estimation techniques in nonlinear systems.

The EKF applies the standard linear Kalman filter methodology to a linearization of the nonlinear system. According to the continuous time-EKF equations, the system and measurement equations are assumed as:

$$\dot{x} = f(x,u,t) + G(t)w(t) \tag{9}$$

$$y = h(x,t) + D(t)v(t) \tag{10}$$

Where the state x (t), the input u (t), and the output y(t) are in ℝ^q, ℝ^p, and ℝ^mrespectively. Moreover, the noise terms w (t) and v (t) are in ℝ^land ℝ^kand are uncorrelated, zero-mean white noise processes with identity covariance. G (t) and D (t) are time-varying matrices of size q× land m× kfor every time t ≥ 0. If the nonlinear functions fand $h$are sufficiently smooth in x, Taylor series expansions can be performed. The following Jacobian matrices are used to linearize the system:

The state space equations of the robotic / prosthetic system can be obtained from (1) and the GRF equations must be differentiated to obtain the state space model of the GRF. However, the nonlinearity of these equations can be problematic.

There are two ways to handle this problem. First, we can use a smooth approximation of the sign function using the *tanh*function; but this approach requires a lot of computational effort for the Jacobian calculation and typically results in EKF divergence. In the second approach, the sign function is not considered when we take the derivative of (2)-(7) to include the GRFs in the state space model. The sign function is re-introduced in the computed Jacobian matrix after taking the derivative. The state space equations of the GRFs are given as follows:

EXPERIMENTAL ANALYSIS AND VALIDATION

Hydraulic actuator test device

The model according to has been made and used to test the kinematics of the actuator in all positions of the imitation of the ankle part, as well as meeting the needs of the maximum stroke. The change in pressure during the correcting of the ankle part of the model has been tested in order to compare the experimental results with the results obtained from the analytical calculation.

Hydraulic actuator testing

The measuring equipment shown was used to test the above-knee prosthetic prototype.

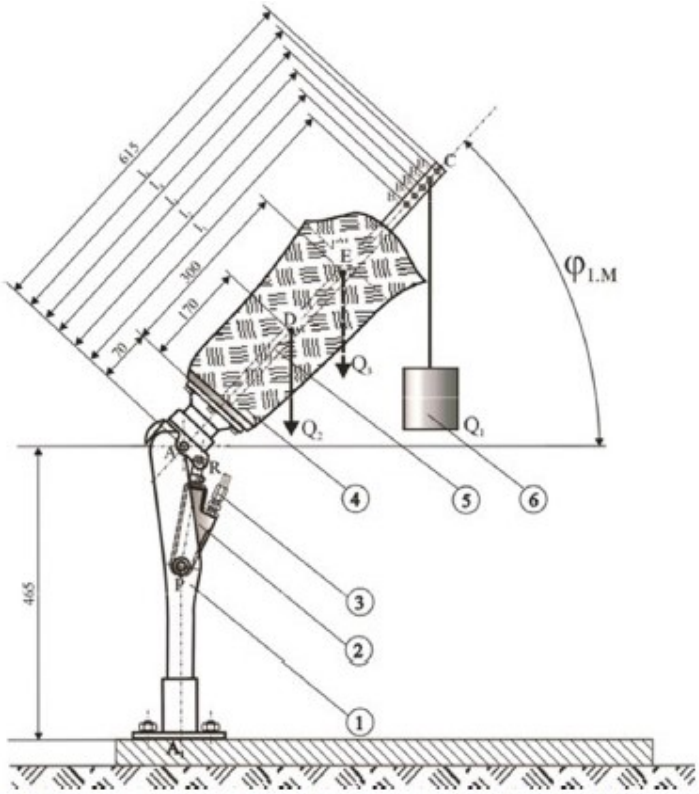

Figure 7.1 Model of the actuator test device: 1, fixing point hydraulic cylinder; 2, hydraulic cylinder in the knee joint; 3, hydraulic connection; 4, socket; 5, test rod; 6, test wight.

The model was loaded with 50 N through a flexible rope on the lever arms that simulated the hamstring length l15487 mm, l25513 mm, l35531 mm, l45545 mm and l55575 mm. Recorded diagrams of registered pressures depending on the lever arm on which the load is hung are given in Figs 7.3 and 7.4. A summary all the diagrams obtained is given in Fig. 7.5, and for better insight into the change in pressure depending on the lever arm on which the prosthesis was loaded, the onset of pressure measurement was set to the same position .The part of the diagram showing the change in pressure when pulling out the connecting rod in the experiments with the model is shown in Fig. 7.6.

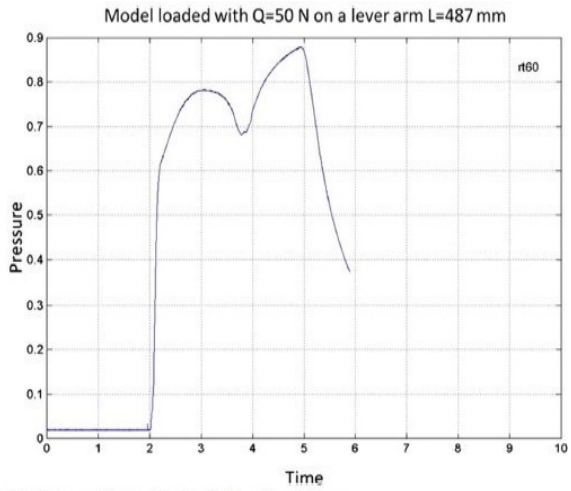

Figure 7.3 Pressure diagram for Q = 50 N and L = 487 mm.

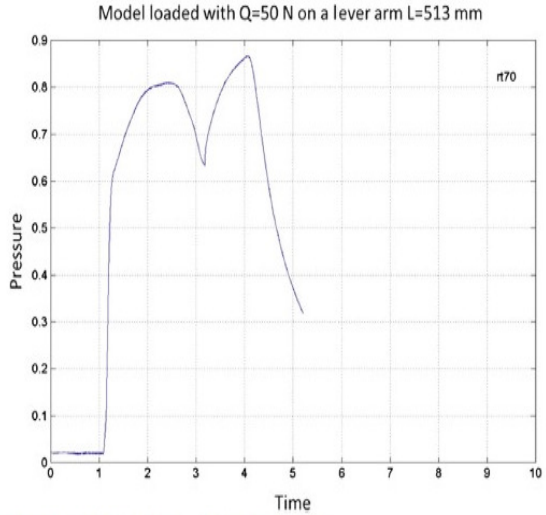

Figure 7.4 Pressure diagram for Q = 50 N and L = 513 mm.

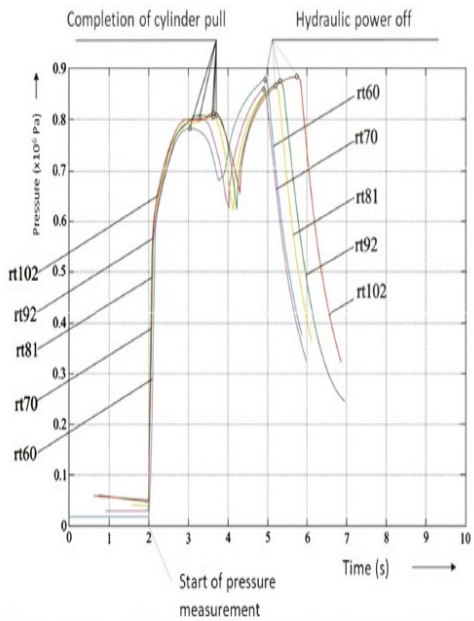

Figure 7.5 Summary of recorded pressure diagrams in the model moved to the same start of pressure measurement.

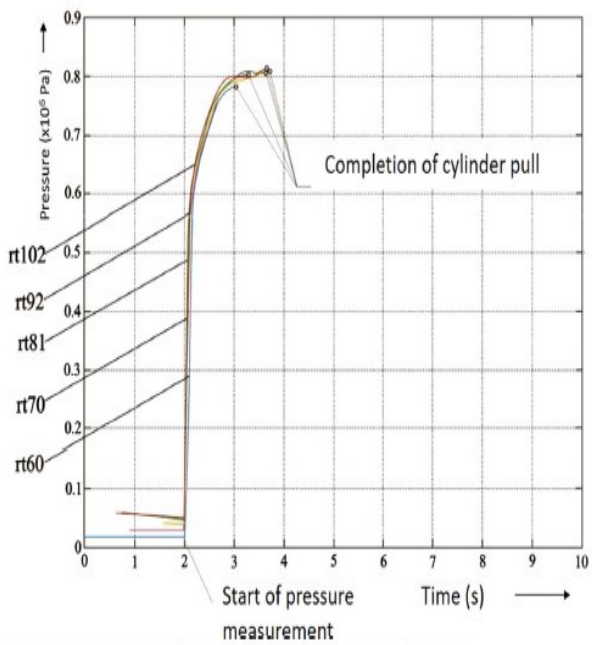

Figure 7.6 Display of pressure diagrams at the piston rod extraction stage.

It can be concluded that the analytical data are identical to the experiments with the linear actuator model.

INTEGRATION OF VISION

Cost Function

We can measure the accuracy of our hypothesis function by using a cost function. This takes an average difference (actually a fancier version of an average) of all the results of the hypothesis with inputs from x's and the actual output y's.

$$J(\theta_0, \theta_1) = \frac{1}{2m} \sum_{i=1}^{m} (\hat{y}_i - y_i)^2 = \frac{1}{2m} \sum_{i=1}^{m} (h_\theta(x_i) - y_i)^2$$

To break it apart, it is $\frac{1}{2}\,\bar{x}$ where $\bar{x}$ is the mean of the squares of $h_\theta(x_i) - y_i$, or the difference between the predicted value and the actual value.

This function is otherwise called the "Squared error function", or "Mean squared error". The mean is halved $\left(\frac{1}{2}\right)$ as a convenience for the computation of the gradient descent, as the derivative term of the square function will cancel out the $\frac{1}{2}$ term. The following image summarizes what the cost function does:

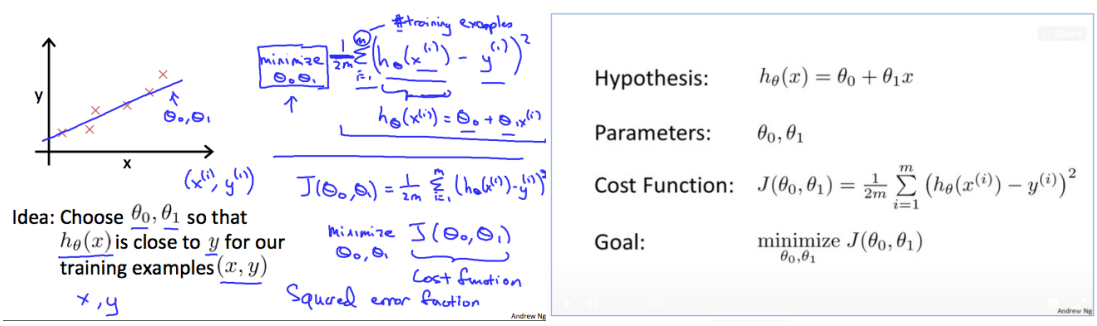

Edge detection

Edge detection includes a variety of mathematical methods that aim at identifying points in a digital image at which the image brightness changes sharply or, more formally, has discontinuities. The points at which image brightness changes sharply are typically organized into a set of curved line segments termed edges. The same problem of finding discontinuities in one-dimensional signals is known as step detection and the problem of finding signal discontinuities over time is known as change detection.

Edge detection is a fundamental tool in image processing, machine vision and computer vision, particularly in the areas of feature detection and feature extraction.

The purpose of detecting sharp changes in image brightness is to capture important events and changes in properties of the world. It can be shown that under rather general assumptions for an image formation model, discontinuities in image brightness are likely to correspond to:

- Discontinuities in depth,
- Discontinuities in surface orientation,

- Changes in material properties and
- Variations in scene illumination.

Edge Properties

The edges extracted from a two-dimensional image of a three-dimensional scene can be classified as either viewpoint dependent or viewpoint independent. A *viewpoint independent edge* typically reflects inherent properties of the three-dimensional objects, such as surface markings and surface shape. A *viewpoint dependent edge* may change as the viewpoint changes, and typically reflects the geometry of the scene, such as objects occluding one another.

We will be using a Viewpoint dependent edge for our project.

Here are some of the masks for edge detection:

- Prewitt Operator
- Sobel Operator
- Robinson Compass Masks
- Kirsch Compass Masks
- Laplacian Operator.

Above mentioned all the filters are linear filters or smoothing filters.

I. Prewitt Operator

Prewitt operator is used for detecting edges horizontally and vertically.

II. Sobel Operator

The Sobel operator is very similar to Prewitt operator. It is also a derivate mask and is used for edge detection. It also calculates edges in both horizontal and vertical direction.

III. Robinson Compass Masks

This operator is also known as direction mask. In this operator we take one mask and rotate it in all the 8 compass major directions to calculate edges of each direction.

IV. Kirsch Compass Masks

Kirsch Compass Mask is also a derivative mask which is used for finding edges. Kirsch mask is also used for calculating edges in all the directions.

V. Laplacian Operator

Laplacian Operator is also a derivative operator which is used to find edges in an image. Laplacian is a second order derivative mask. It can be further divided into positive laplacian and negative laplacian.

All these masks find edges. Some find horizontally and vertically, some find in one direction only and some find in all the directions. The next concept that comes after this is sharpening which can be done once the edges are extracted from the image.

9.Pokia Electric Energy

College name	Guru Gobind Singh College of Engineering and Research Centre
Guide	Prof. DhananjayDesale
College student's	1.Shreya M. Jagtap 2.Tejashree D. Badgujar
School Student's	1.Omkar M. Jagtap 2.Aditi R. Deshmukh 3.Abhishekh R. Sonawane

School Name	1.St. Francis High school 2.MVP Sunrise English Medium School 3.Z.P.P.S Mavara

Abstract
To overcome the scarcity of electricity renewable energy is the best option. So in this project, there is utilization of physical energy .i.e. conversion of physical energy to mechanical energy and to electrical energy. In the green gyms every equipment which has motion, by doing setup that motion which is produce by workout is converted into electrical energy. And then this electrical energy will be stored in a battery in day time and can use it in night.

Introduction

- The world is making good progress on increasing access to electricity and improving energy efficiency. However, millions of people throughout the world still lack such access.
- The pandemic has highlighted the need for reliable and affordable electricity in health centers.
- Even in today's world many of the rural area don't have sufficient electricity supply.
- Almost one fourth health facilities in world are facing scarcity of electricity affecting their capacity to deliver essential health services.
- Poor health services gives birth to current health crisis like COVID19 pandemic.
- To overcome scarcity of electricity use of renewable energy is best option we have. Use of renewable energy is increasing day by day.
- On other hand much faster growth in renewable energy is required to meet long term climate goals.

Chapter 2
2. Objective of Project

- This project aims to convert freely available muscular or mechanical energy into electricity. Any kinetic or potential energy can be converted into mechanical energy. The mechanical energy can be linear or rotational. We have considered muscular energy utilized in Green Gym. When people exercise, they generate mechanical energy. With the help of suitable mechanism, it is converted into rotational and then electrical energy.
- The electrical energy thus generated can be stored in Lead-Acid battery or Lithium-Ion storage battery and can be used during night time to illuminate street lights.
- With so many gyms coming up in cities, we can generate sufficient energy for this or other purposes. We can consider any other form of energy to be converted into useful electrical energy.

- This will reduce the pollution in generating electricity using coal or other fuels in small way

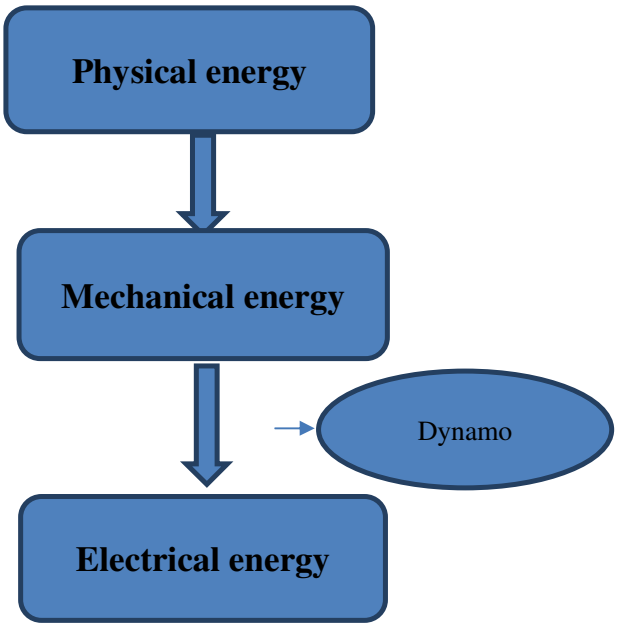

Description

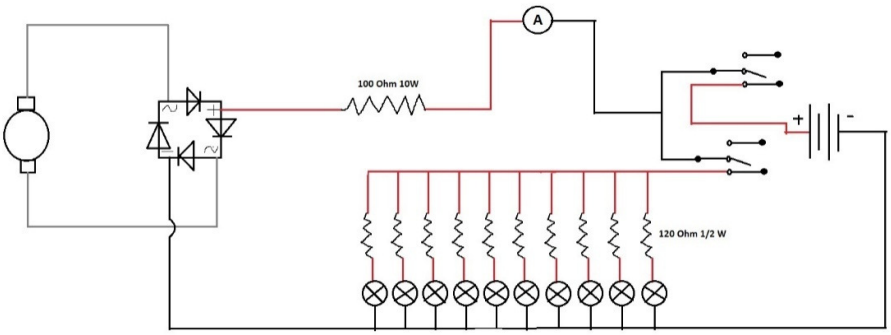

3.1Circuit diagram

3.1 Components

- Dynamo
- Rectifier
- Resistor
- Ammeter
- SPDT Switch
- Battery
- LEDs

3.2 Working

Dynamo (12V) -

A dynamo is a device that converts mechanical energy into electrical energy. The dynamo has a wheel that touches the wheel of instrument. As the instrument moves, the wheel turns a magnet inside a coil. The faster the instrument's wheel moves, the greater the induced voltage - and the brighter the lights.

We are using a 12V cycle dynamo, which will convert mechanical energy into Electrical energy and that Electrical energy further stored in the battery.

Attachments area

Rectifier-

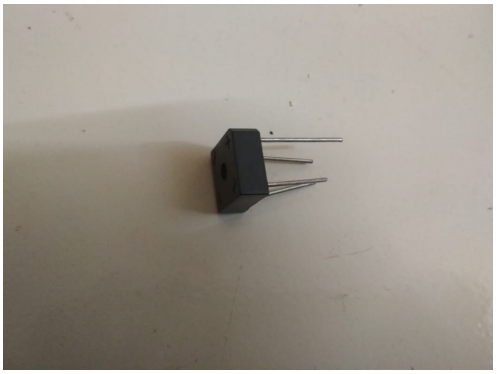

A diode bridge is an arrangement of four diodes in a bridge circuit configuration that provides the same polarity of output for either polarity of input. When used in its most common application, for conversion of an alternating-current input into a direct-current output,
As dynamo produces AC current by using rectifier AC current is converted into DC current for charging a battery.

Resistor-

A resistor is a passive two-terminal electrical component that implements electrical resistance as a circuit element. In electronic circuits, resistors are used to reduce current flow, adjust signal levels, to divide voltages, bias active elements, and terminate transmission lines, among other uses.
We have used 100E 10W resistor here.

Ammeter-
Ammeter is used to measure the current.

SPDT Switch-

A Single Pole Double Throw (SPDT) switch is a switch that only has a single input and can connect to and switch between the 2 outputs. This means it has one input terminal and two output terminals. A Single Pole Double Throw switch can serve a variety of functions in a circuit.
We have used two SPDT switches in our project.

Battery (6V)-

A 6V battery is used for this experiment. 6V battery will generally hold enough charge for 45-60 minutes of continuous use. It takes almost 6 hours for getting fully charged.

Resistor-

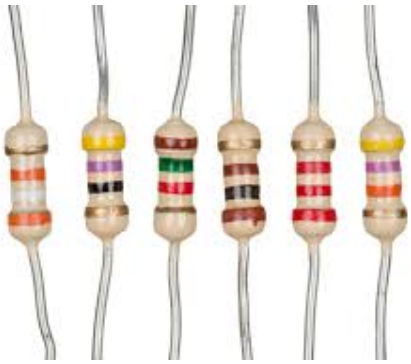

We have used 10 resistors of 120ohm 1W to limit the current flowing in LED lamps.

LED (to be operated using resistor at 6V)-

3 LED of 6V of 10mm diameter are used.

3.3 Instruments used

Tachometer-

A tachometer (revolution-counter, tach, rev-counter, RPM gauge) is an instrument measuring the rotation speed of a shaft or disk, as in a motor or other machine. The device usually displays the revolutions per minute (RPM) on a calibrated analogue dial, but digital displays are increasingly common.

True RMS meter-

A true RMS meter works by taking the square of the instantaneous value of the input voltage or current, averaging this value over time, and then displaying the square root of this average.

3.4 Observation Table

RPM	Voltage
45	3v
55	6v
80	9v
120	12v

3.5 Calculations
The Dynamo has the specifications as below:
Voltage- 12V
Wattage- 6W
So, it is capable of delivering 6W/12V= 0.5Ampere current or 500milliampere current.

Current requirement of LED lamps:
Since all LEDs are switched on together, effective resistance of ten 120ohm resistors would be 12ohms.
So total current after all LEDs are switched on would be

10V/ (100+12) ohms = 89milliamperes.
This value is calculated considering LED voltage drop of 2 Volts.

Battery Charging Current requirement:
When fully discharged, battery will take current as follows:
12V/100ohm= 0.12Ampere or 120milliamperes.
When it has more charge, the charging current will be less than this value.

The total maximum current taken from dynamo would always be less than (120+89) = 209milliamperes (mA).
This is within the capacity of dynamo, which is 500mA.

Model

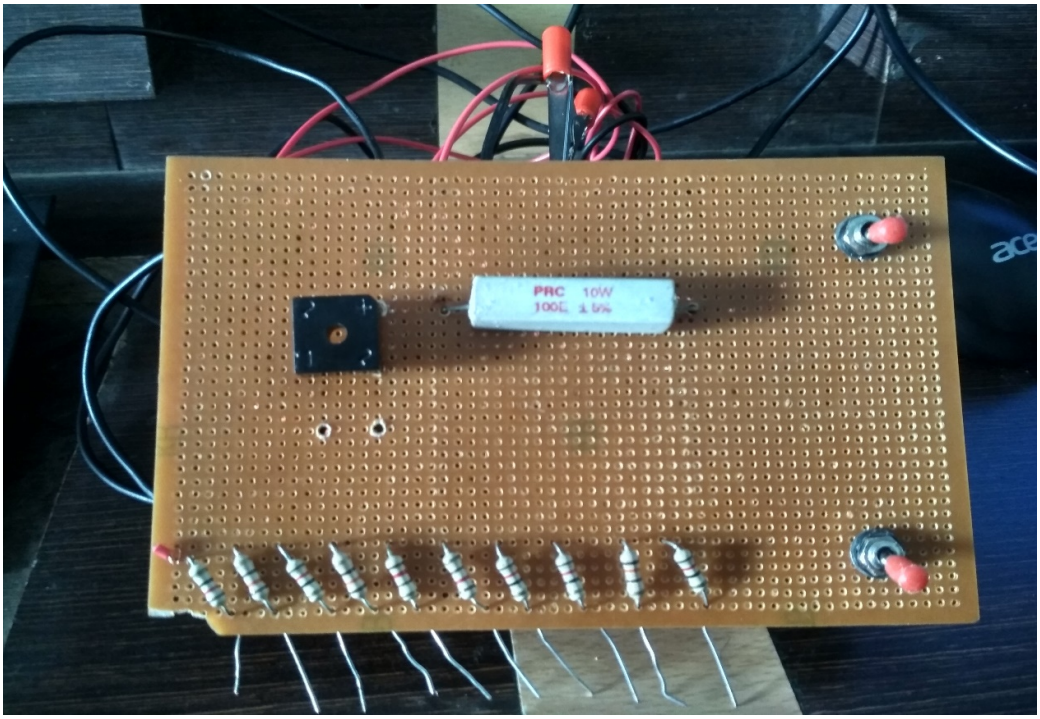

3.2 Circuit

3.3 Green gym model (Shoulder Builder)

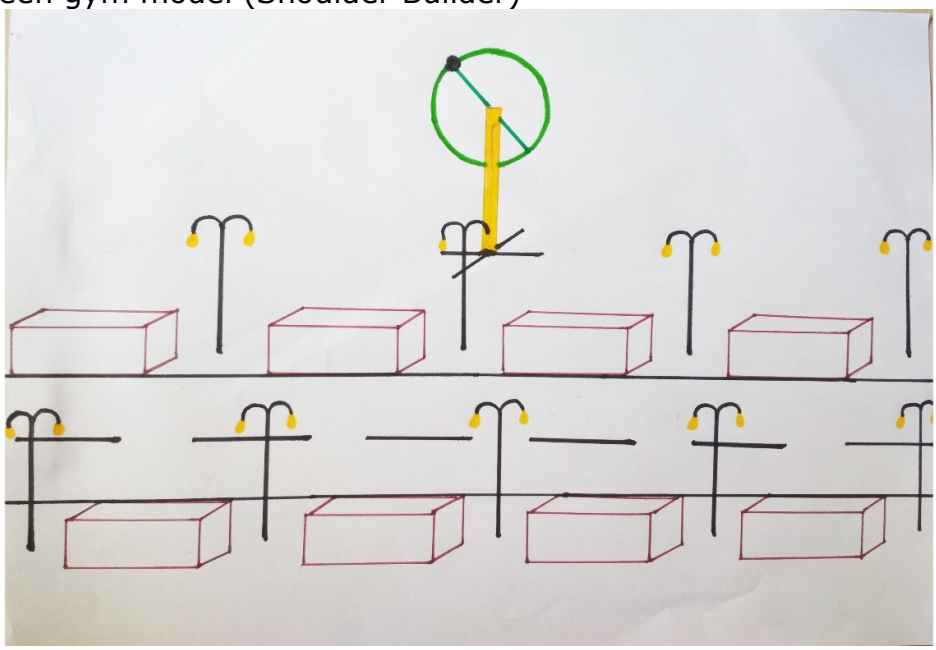

3.4 Illumination Scheme

Chapter 4

4. Advantages, Disadvantages, Application

4.1 Advantages

- It will convert physical energy into electrical energy.
- It will help to reduce cost of electricity bill.
- Eco-friendly.
- No pollution.

4.2 Disadvantages

- Such energy is not available all the time, particularly during rainy season. So we have to make supplementary provision for such seasons and emergencies.

4.3 Applications

- This idea used in closed gym and open gym.

Chapter 5

5. Conclusion

This project shows one of the many ways to utilize freely available energy in our daily lives, which must be used for meaningful purpose and reduce pollution.

10. WATER TREATMENT SYSTEM

COLLEGE	SMT. S.K.SHAH(CHAHWALA) COLLEGE OF EDUCATION, KAPADWANJ
GUIDE	MISS. MADHAVI SHARMA
COLLEGE STUDENTS	HARDIK JOSHI, JIGNESH VAGHELA
SCHOOL STUDENTS	MUDRA D. SHAH, VIDHIRAJ L. CHAUHAN
SCHOOL	SHREE MANEKLAL DESAI KISHORMANDIR, KAPADWANJ

ABSTRACT

To get purified and mineral water is a major problem for all animate. This water treatment system is a very useful system which helps those people who can't buy very costly water purifier. Using this water treatment system, we can easily purify the water and makes it drinkable and useable. We get many vitamins and minerals. We can make easily water purifying filter at home by using natural materials like sand, stones, cotton balls. This purifier is low cost and we can make it easily at our home and use it. We can use it anywhere where people can't get pure water. The natural materials are absorbed all types of impurities and makes water pure and drinkable.

METHOD

Cut off the bottom of an plastic bottle using scissors or knife. Place the bottle into container. Place cotton balls inside the bottle as the first layer. Each layer of the homemade water filter has a purpose. The first layer should be about one to two inches thick. Add an inch of activated charcoal as the second layer on top of the cotton layer. The activated charcoal removes contaminants and impurities through chemical absorption. Over

the charcoal, add about two inches of small stones as the third layer. Small stones are used to filter out large sediments like leaves, insects etc. Add about three to four inches of clean sand on top of the small stones. Whereas sand used to remove fine impurities. Add small stones to the bottle as the final layer. Leave about a half inch of space from the top of the upside down bottle. Now take a container and cut out it and set-up the tap. Set both containers on top of each other. Place the plastic bottle in the container. Add tap or dirt water. Pour the glass of dirt water on top of the homemade water filter and watch the water drip clean into the glass below.

DIAGRAM OF PROJECT

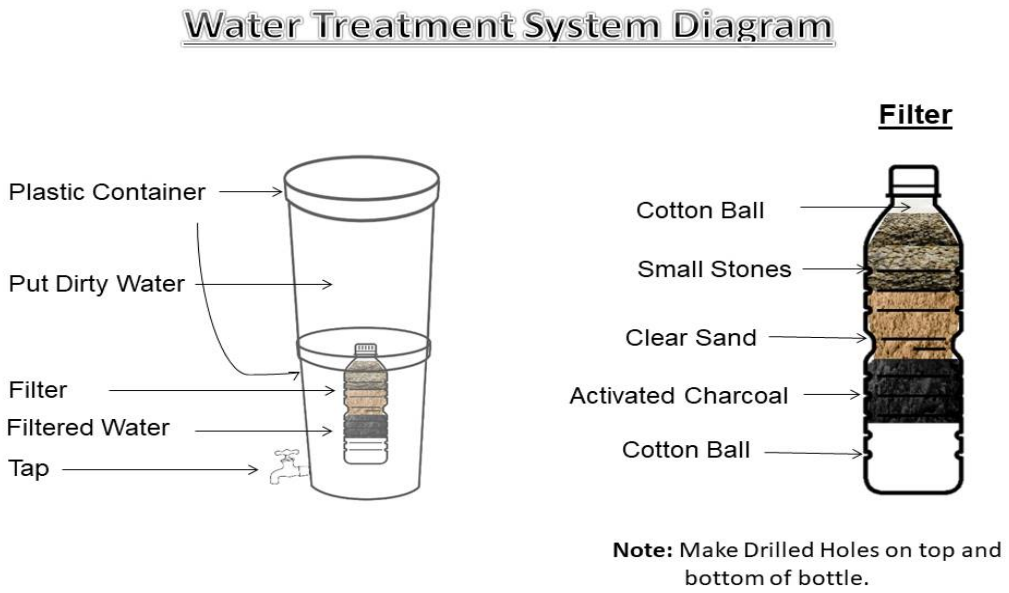

PHOTOGRAPH OF COUNSELING (STUDENT LEARNING)

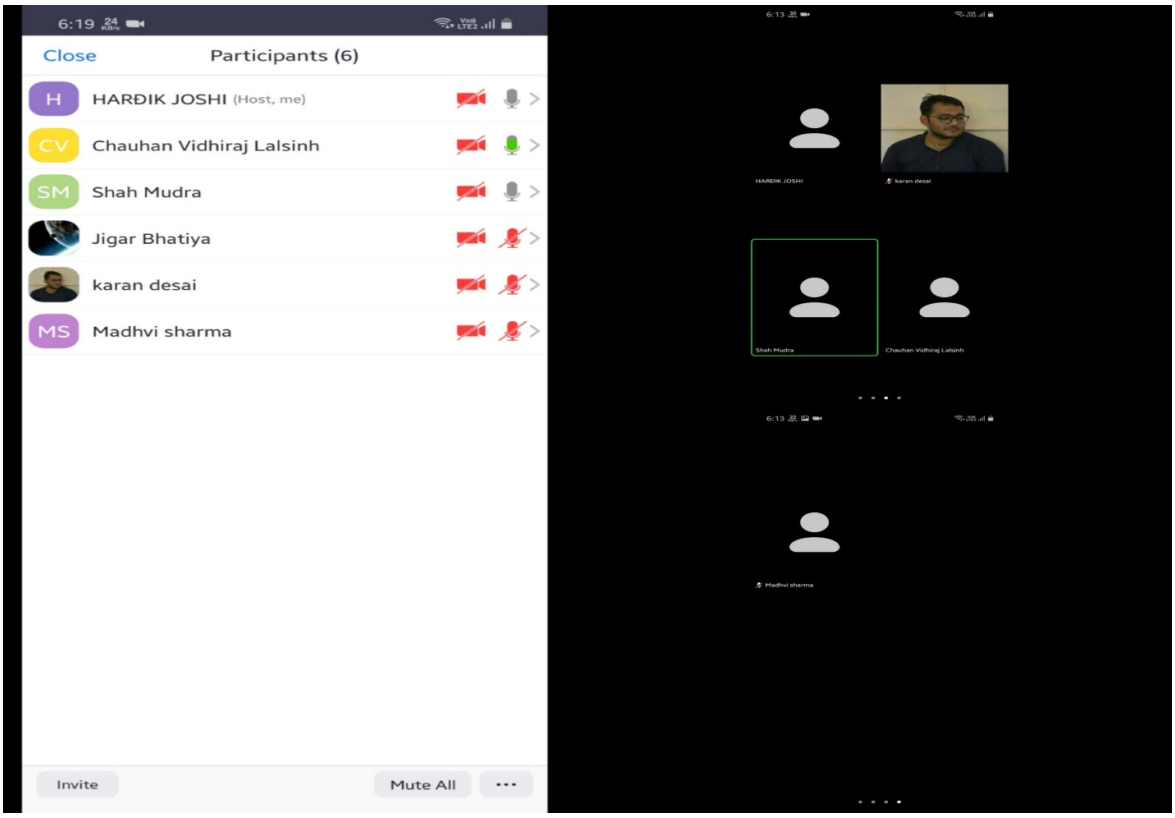

BENEFITS

- Every human can't afford costly water purification system.
- Here is affordable purification system that we can makes water purified.
- I make volunteer to my nearby villages and to understand villagers how to make purify water at home at low cost.
- We are aware to take visit those villages by volunteer and we make volunteer in each village.

SUMMARY

Did you know that every year millions of people all over the world and in our country suffer from serious diseases due to contaminated water and many people lose their lives.

Water purifier is helps us to makes water pure and makes water rich in vitamins and minerals. This water purifier is low cost and we can make at home easily by using natural materials.

Activated charcoal is play important role in this purifier. It absorb many impurities and removes contaminants.

COST

The total cost of this project is approx rupees 3000-4000/-

11. PAVER BLOCK FROM PLASTIC WASTE

Introduction

1.1 General

Plastic is good replacement for cement in paver blocks. Production of cement causes pollution and can prove harmful to plants and living beings. Melted plastic can prove to be an effective replacement of binding material i.e., cement.

It can prove to be cost effective and will help in minimizing plastic waste by reusing and recycling.

1.2 Aim and Objective

Aim

Build resilient infrastructure, promote inclusive and sustainable industrialization and foster innovation.

Objective

1. To address 9th goal of United Nations Sustainable Development
2. To reduce plastic waste from environment
3. To replace binding material of paver blocks
4. To make paver block anti-fungal by adding Sulphur Grains.
5. To reduce cost of paver blocks.

1.3 Problem statement

Due to lack of awareness to collect back the plastic waste products used, it ends up causing various diseases and even lead to death of animals.

Each year, plastic waste in coastal areas kills lacks of marine animals and about millions of sea birds and countless fishes. According to a survey conducted in 2018, India produces more than 16.3 million tonnes of plastic annually.

In consideration to the effects of plastic pollution, PM imposed blanket ban or say complete ban on single use plastic as a part of broader efforts to completely ban it by 2022.

The most astonishing thing about cement is how much air pollution it produces. Manufacturing the stone-like building material is responsible for 7% of global carbon dioxide emissions, more than what comes from all the trucks in the world

1.4 Background

It is not possible to ban plastic completely and even if we ban it by replacing it by any other means, we need to look over the plastic that is present in environment.

One just cant go over by banning the plastic, we need to decompose it as soon as possible to minimize the effect of plastic pollution as it creates ground water pollution, land pollution, upsets food chain and poses danger to local animals.
Minimizing such plastic waste by reusing and recycling can be highly effective.
One of the way to reuse these plastic waste is to use it in paver block as a replacement of binding material i.e., cement.
Manufacturing of cement requires huge amount of natural resources (i.e., silica, graphite, limestone, iron ore, etc.) , electricity and skilled labours.
So, replacing the binding material with plastic will not only reduce plastic waste present in environment but also prove to be economical and eco-friendly.

ABSTRACT -

The aim of the project is to recycle the plastic waste into a paver block and to reduce the cost of the paver block when compared to that of a convention concrete paver block. Plastic waste has become a major problem these days. As plastic is non bio degradable material it blocks drains, pollutes rivers and wreaks havoc on the environment. At present nearly 56lakhs tones of plastic waste is produced in India per year. As the degradation of the plastic waste is a very slow process so here is an idea of mixing sand into melted salvaged plastic to make a solid, durable material as a paving slab. Hence, we have a "eco-friendly" paving block

CONCLUSION –

The following conclusion was drawn from the experimental investigation.

- The utilization of waste plastic in production of paving block has productive way of disposal plastic waste.
- The cost of paving block is reduced when compared to that of concrete paving block.
- Paving block made using plastic waste, sand shown in better result.
- It also good heat resistance.
- Though the compressive strength is high when compared to the concrete paving block it can be used in gardens, pedestrian path and cycle way etc.
- It can be used in Non-traffic and light traffic road. As a civil engineer and a citizen of our country we have the responsibility of educating people about the recycling and reusing of our resources because of the scarcity of resources and their effects.

- This attempt of recycling of plastic waste into a paving block has been made so as to reduce to the degradation of plastic waste into an "Eco-Friendly "paving block

CONCLUSION –

The method presented in this paper is very simple and can thus easily be utilized by people in rural and semi-rural India. The following are the key findings of this study-

- Adding LDPE plastics over heated sand effectively melted the plastics which formed a layer over the sand particles, thereby enabling easy blending of the mix.

- The findings from the project suggest that recycled LDPE bonded-sand paver blocks can be an effective alternative to the traditional building materials, with the optimum results being obtained for a plastic: sand ratio of 1:3.

ABSTRACT -

The aim of this project is to replace cement with plastic waste in paver block and to reduce the cost of paver block when compared to that of convention concrete paver blocks. At present nearly 56 lakhs tones of plastic waste is produced in India per year. The degradation rate of plastic waste is also a very slow process. Hence the project is helpful in reducing plastic waste in a useful way. In this project we have used plastic waste in different proportions with quarry dust,
coarse aggregate and ceramic waste. The paver blocks were prepared and tested and the results were discussed.

CONCLUSION –

The following conclusions were drawn from the experimental investigation

- The utilization of waste plastic in production of paver block has productive way of disposal of plastic

waste.

- The cost of paver block is reduced when comparedto that of concrete paver block.
- Paver block made using plastic waste, quarry dust,coarse aggregate and ceramic waste have shown

better result.

- It also shows good heat resistance.
- Though the compressive strength is low when compared to the concrete paver block it can be used

in gardens, pedestrian path and cycle way etc.

- It can be used in Non-traffic and light traffic road.

Chapter 3
Methodology

3.1 Principle of operation
In general, techniques used in manufacturing cement binding paver block doesn't change much in plastic binding paver block. The melted plastic is used as a replacement of cement.
3.2 Applied Methodology
3.2.1 Material Collection
The materials collected are aggregates, plastic waste, sand, quarry dust, etc.
Type of material are as follows :
1. Plastic waste
2. Coarse aggregate : 12.5 mm size
3. Coarse aggregate : 10 mm size
4. Fine aggregate (Sand) : 2.36 mm size
5. Laterite dust : 9 micron
6. Slab MouldSize : 200 x 100 x60 mm
7. Lubricating oil
8. Sulphur grains

1.2.6 Schedule of project

DESCRIPTION OF WORK		TIME PERIOD
1	Introduction	1st week of December
2	Research Paper review	1st week of December
3	Material Collection	2nd week of December
4	Processing on collection	Last week of December
5	Melting & casting	3rd week of January
6	Testing	1st week of February
7	Result interpretation	2nd week of February
8	Paper work	Last week of January

3.3 Theoretical Analysis
Theoretical analysis includes different properties of materials used and their specification.
3.3.1 Material Specification
1.Plastic Waste (LDPE): Plastic waste which is use as a binder is collected from local vendors which consist of plastic bottles, polythene bags, etc. The size of which ranges from 6.5 microns to 0.10 microns.

PROPERTIES OF LDPE

Sr. No.	Properties	Value
1.	Melting point	150°
2.	Thermal coefficient of expansion	$100\text{-}200\times10^{-6}$

3.	Density	0.910 – 0.940
4.	Tensile strength	0.2 – 0.4(N/mm^2)

PLASTIC WASTE

2. Coarse Aggregate: Crushed basalt stones from local queries were used as aggregate. The maximum size of aggregate used was 12.5 mm retained. The aggregates were washed to removed dirt and dust and were dried to surface dry condition.

COARSE AGGREGATES

3. Quarry Dust: Laterite stone is used majorly for construction purposes in Konkan region. The powdered form which is used in this project i.e., laterite dust which is obtained while cutting the stone.

LATERITE DUST

4. Fine aggregates (Sand): Sand is collected from sea shores and is sieved from 2.36 mm sieve.

SAND

5. Sulphur Grains: Sulphur has a property of anti fungal. So, to make paver block free from fungus sulphur grains are used.

Chapter 4
Experimental Procedure

4.1 General

Melted plastic which is used as a binding material is mixed with other constituents which are to be used. The mixed material is then poured in the wooden mould and blocks of certain size and shape are obtained.

4.2 Procedure

1. The plastic waste which is thrown away by vendors was collected from them and was brought to the place of experimental analysis.

COLLECTING PLASTIC FROM LOCAL VENDORS

2. Other materials such as coarse aggregates, fine aggregates, laterite dust, etc. were collected.
3. Shredding of plastic waste was done for easy melting.

4. Mould of size (200×100×60 mm) was asked to made.

WOODEN MOULDS

5. Sieving of material was done with specific sized sieve.

Sr. No.	Type	Sieve Size
1.	Fine aggregate (Sand)	2.36 mm
2.	Coarse Aggregate (Type 1)	10 mm
3.	Coarse Aggregate (Type 2)	12.5 mm
4.	Laterite dust	9 micron

6. The outcome from the research paper studied was, the plastic binded paver block casted with the ratio of 1:3 (Plastic : Aggregates) gives maximum strength compared to other ratios. As a result we decided to go with this ratio scale. Detailed information is given in the table below:

FOR TYPE 1 PAVER BLOCK

Plastic waste	1
Fine Aggregates	1.8
Laterite Dust	0.2
Coarse Aggregates	1

FOR TYPE 2 PAVER BLOCK

Plastic waste	1
Fine Aggregates	0.8
Laterite Dust	0.2
Coarse Aggregates	2

FOR TYPE 3 PAVER BLOCK

Plastic waste	1

Fine Aggregates	1.3
Laterite Dust	0.2
Coarse Aggregates	1.5

7. Plastic waste are heated in metal bucket at a temperature at above 150°C. As a result heating of plastic waste melt.

SETUP FOR MELTING AND MIXING

8. The materials quarry dust, aggregates and other materials as described in above tables are added in it in right proportion.

AFTER MIXING MELTED PLASTIC AND AGGREGATES

9. Melted material is then well mixed.

COLLEGE STUDENT MIXING THE MATERIAL

10. Wooden moulds are lubricated with lubricating oil.

11. Melted material is then transferred in to wooden mould of certain shape.

MELTED MATERIAL TRANSFERRED INTO WOODEN MOULD

12. After transferring melted material, the wooden mould is quickly placed on vibrating table.

13. Paver blocks are placed for 24 hrs curing in open environment.
14. After that this paver blocks are ready to use.

READY TO USE PAVER BLOCKS (PLASTIC BINDED)

Chapter 5
Result Interpretation

5.1 Introduction:
The result for the tests carried out are as follows:

5.2 Tests Performed

1. Water Absorption test
2. Compressive Test
3. Heat resistant test

5.3 Result Interpretation
1. Water Absorption Test

FOR TYPE 1

Sr. No.	Paver block	Percentage
1.	PB1	2.7%
2.	PB2	2.35 %
3.	PB3	2.5 %

FOR TYPE 2

Sr. No.	Paver block	Percentage
1.	PB1	2.75 %
2.	PB2	2.3 %
3.	PB3	2.65 %

FOR TYPE 3

Sr. No.	Paver block	Percentage
1.	PB1	2.8 %
2.	PB2	2.25 %
3.	PB3	2.6 %

2. Compressive Strength Test

FOR TYPE 1

Paver block	Compressive strength (N/mm^2)
PB1	9.75
PB2	9.93
PB3	9.80

FOR TYPE 2

Paver block	Compressive strength (N/mm^2)
PB1	10.55
PB2	9.98
PB3	10.00

FOR TYPE 3

Paver block	Compressive strength (N/mm^2)
PB1	9.80
PB2	9.75
PB3	10.00

3. Heat Resistance Test

FOR TYPE 1

Sr. No.	Specimen	Temperature (^oC)	Remark
1.	PB1	50	No changes
		100	No changes
		150	Melts
2.	PB2	50	No changes
		100	No changes
		150	Melts
3.	PB3	50	No changes
		100	No changes
		150	Melts

FOR TYPE 2

Sr. No.	Specimen	Temperature (^oC)	Remark
1.	PB1	50	No changes
		100	No changes
		150	Melts
2.	PB2	50	No changes
		100	No changes
		150	Melts
3.	PB3	50	No changes
		100	No changes
		150	Melts

FOR TYPE 3

Sr. No.	Specimen	Temperature (^oC)	Remark
1.	PB1	50	No changes
		100	No changes
		150	Melts
2.	PB2	50	No changes
		100	No changes
		150	Melts
3.	PB3	50	No changes
		100	No changes
		150	Melts

Chapter 6
Comparison & Conclusion

6.1 Comparison

Cement Binded Paver Block	Plastic Binded paver block
Low Heat Resistance	Good Heat Resistance
Less Economical	More Economical
Can be used in High Traffic areas	Can't be used in High Traffic areas
High Compressive Strength	Comparatively Low Compressive Strength
High Water Absorption	Less Water Absorption
More weight	Comparatively light weight
Fungus present in Rainy season	Anti-fungal

6.2 Conclusion

The following conclusions were drawn from the experimental Investigation :

- The utilization of waste plastic in production of paver block has productive way of disposal of plastic waste.
- The cost of paver block is reduced when compared to that of concrete paver block.
- Paver block made using plastic waste, quarry dust, coarse aggregate have shown better result.
- It also shows good heat resistance.
- Though the compressive strength is low when compared to the concrete paver block it can be used in gardens, pedestrian path and cycle way etc.
- It can be used in Non-traffic and light traffic road.
- Minimization of plastic waste can proved to be highly effective and can help us to reduce plastic pollution

GROUP PHOTO

12. Free energy transport model report

College name	K J Somaiya institute of engineering and information technology
Guide	Prof Mrs. SandhyaDeshpande
College students	Aathiragopinathan, Aklantsahu
School students	Sairajsanjaykhetal, KarishmaMahadevkhetal
School name	Vidyanidhivrajlalparekh high school marathi

ABSTRACT

In this modern world we are facing many problems such as overpopulation, overconsumption of resources, manipulating available energy resources to such an extent such that the damage is irreversible. If we want our future generations to sustain, we will have to use a sustainable source of energy, such as renewable sources of energy. Example- solar energy. As the population increases the roads become congested and traffic Is at its peak. In these conditions what's better than a two-Wheeler. A scooter to get through the narrow openings. Our basic idea is to build a free energy transportation model. Since we know that when vehicles pass over speed breakers, their kinetic energy is lost in the form of heat and also their potential energy which they achieve by going on top of the speed breaker is lost. We are planning on to retrieve this energy which is being lost as heat to produce potential difference and hence power.

PLANNING OF WORK

Speed breakers outline

Parking systems outline

(LEDs)

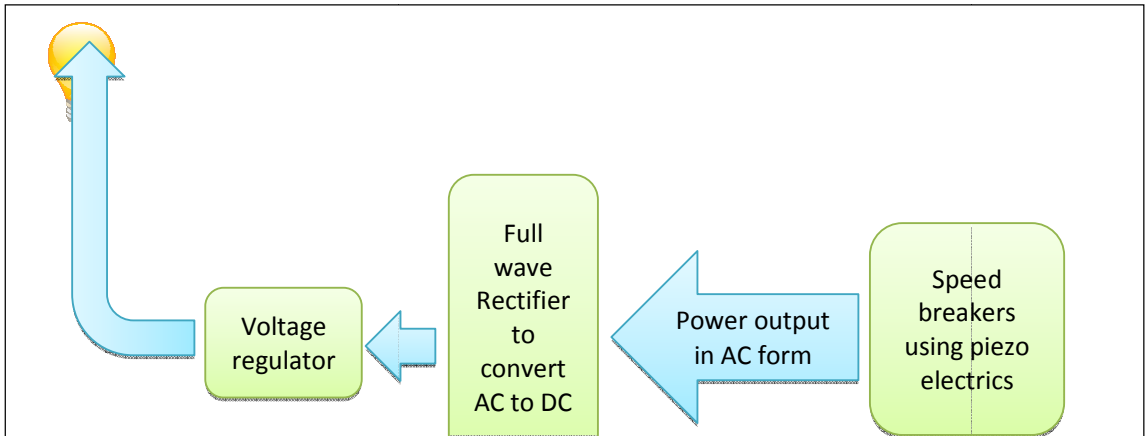

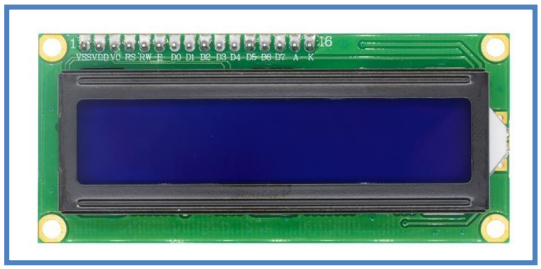

Polarized 1mF and 10nF ceramic capacitors

Polarized 1mF and 10nF ceramic capacitors

47 k ohm potentiometer

5V relay available

5V PIR motion sensor

5V IR sensor

1 mA Zener diode

40mm thick copper substrate ceramic silver paste piezoelectric for speed breakers

METHODS

We will use piezoelectric materialsto retrieve this energy lost on speed breakers as a potential difference. We will retrieve the power and would use a transformer to convert and then a full wave rectifier to get a stable DC voltage. We'll setup these free energy scooter hubs in front of a well-planned placed speed breaker. This potential difference would power up the hub and charge the electric scooters which are pre equipped with paddles (just in case). Even the seat of the vehicle would be equipped with transducers which would provide enough to power the head lights. The locking mechanism would also be based on electricity. The base of the hub and the scooter would be made with an electromagnet. When the job is done the switch is kept on and the current passes through the electromagnet and magnetizes it. These opposite poles north and South gets attracted to each other. Hence locked. This model is completely based on free energy hence our first step towards sustainable and Pollution free development.

BENEFITS

The free energy transport has its advantages as-

- Retrieving the lost energy(potential)
- Renewable energy being used.

SUMMARY

Our main motive is to eliminate the problem of overconsumption of resources and manipulating the available energy resources for the requirements, we will be using the sustainable source of energy, such as renewable sources of energy, tapping into enormous amounts of renewable energy, thus ensuring energy fulfillment of future generations as well.

COST

The cost of this project is rupees 2500/-

13. STUDY ON MODIFIED RECYCLING OF GREY WATER TRETMENT

College	Maharshiparshuram college of engineering, velneshwar
Guide	Mr. MandarPawari
College Students	Ms. VeenaSalvi Ms. Anjali Rathod
School Students	MS. Amrutakanse Ms. SanyuktaRamane
School	Smt. RakhumaiPandurangPalshetkarVidhyalaya,

	Palshet

Abstract
Wastewater is the water that emerges after fresh water is used by human beings for domestic use. This fresh water is used for a varieties of domestic uses such as washing, bathing and flushing.

Grey water is all the waste water generated in households or office buildings from streams without fecal contaminations, i.e. all streams except for the waste water from toilets. Sources of grey water include sink, showers, baths washing machines, dishwashers. The domestic consumption of water in India is about 135 lit/day/capita. A centralized treatment facility often faces problems of high cost of collection, treatment and disposal of grey water and hence the growing needs for small scale decentralized eco-friendly alternative treatment options are necessary. In recent days many developing nations cannot affort to construct and maintain costly grey water treatment plants. They need more options for grey water treatment at low cost. In this study grey water is treated using
vermi-bio sand filter contains earthworms. Earthworm body works as bio-filter which widens the microbial metabolism by increasing their population. The objective of the proposed work is to investigate the treatment of grey water using vermi-bio sand filter.
Keywords: Vermi-bio sand filter, Grey water, Earthworms, Decentralization.

Aim

- The reusing of grey water to flush toilets and water plants reduces a load of freshwater required and if enough people make the same choice, the water demands can be reduced so drastically as to positively impact the environment.

Objectives

- To study the effectiveness of earthworms in pollution reduction.
- To remove the organic load in the grey water.
- Characterization and analysis of grey water parameters.
- To provide low cost treatment.
- To increase the productivity of filtration.

Problem statement

- In present grey water treatments are relying on filter, heat and ultra violet rays to destroy hazardous chemicals or organic loads. It requires more money.
- In common practice the untreated sewage is directly discharge into water bodies or put onto agricultural land, causing significant health and economic risks.
- The effect of inadequate treatment can be detrimental to a community on economic, cultural and health-levels. The costs of poorly managed domestic waste are very high.

Methodology

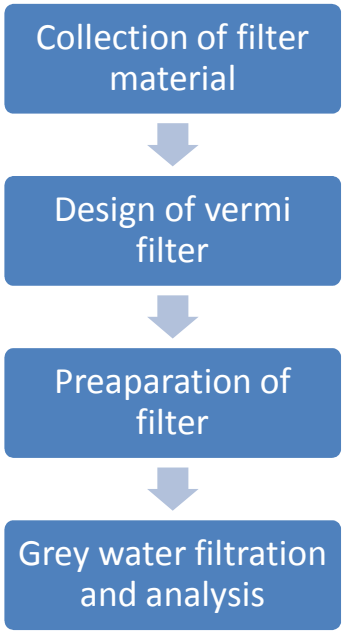

Fig no. 1 : Experimental setup

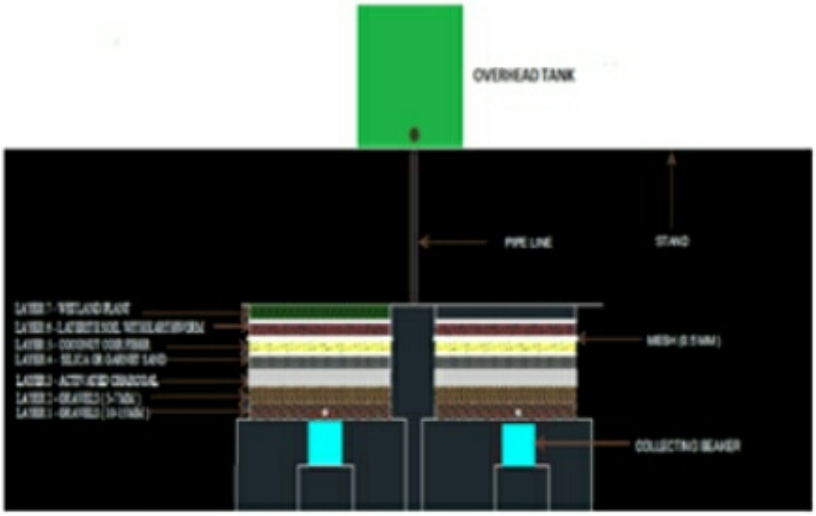

Fig no. 2 :Vermi-bio sand filter system and filter media layer

Working of filter

Around 45 liter of grey water was kept in PVC drums. These drums were kept on an elevated platform just near the vermifilter unit. The PVC drums had tap at the bottom to which a sprinkler system was attached. The sprinkler system consisted of simple 16 mm polypropylene pipe with holes for trickling water that allowed uniform distribution of grey water on the soil surface (vermi-bio sand filter bed). Grey water from the drums flowed through the irrigation pipes by gravity. The grey water percolated

down through various layers in the vermi-bio sand filter bed passing through the soil layer inhabited by earthworms, the sandy layer, and the gravels and at the end was collected from the bottom of the system. Next day this treated grey water from both systems were collected and analysed for BOD, COD, pH, turbidity and the TSS. During operation the surface loading of the grey water was adjusted to (i.e., 40 liters per day for the system area), and the wet to dry time ratio was 1:3. These approaches prevented the blockage of the soil layers and sustained the penetrability of the ecofilter. The entire volume of the synthetic grey water was applied in continuous operation mode through polypropylene pipe with holes to ensure uniform distribution of the influent. The polypropylene pipe was placed on the upside of the vermi-bio sand filter surface, 15 cm from the top layer of vermi-bio sand filter. The same operational procedure was repeated for
the control unit/non-vermi-bio sand filter unit for reference and comparison. To start up the non-vermi-bio sand filter, seeding was adopted using less polluted a grey water to develop microbial film layer on the filter bed, this will help to degrade the organic matter contain. The seeding was done for duration of 7 days before starting actual grey water feeding. After seeding, the actual procedure was repeated as same as vermi-bio sand filter operation.

Result

Grey water analysis

Note : R-1 = Results of vermi-bio sand filter.
R-2 = Results of non vermi-bio sand filter.

- pH

Sample no and date	Sewage	R-1	R-2
1.(4/01/2021)	7.74	8.34	7.40
2.(6/01/2021)	7.76	8.18	7.78
3.(8/01/2021)	7.64	8.34	7.52

- COD

Sample no and date	COD in mg/lit				
	Sewage	R-1	Reduction	R-2	Reduction
(4/01/2021)	258	194	25	234	13.5
(6/01/2021)	172.4	56.4	68.21	119.2	32.58
(8/01/2021)	172.2	56.4	66.31	75.66	57.74

- BOD

Sample no and	BOD in mg/lit

date					
	Sewage	R-1	% Reduction	R-2	% Reduction
1.(4/01/2021)	132	52	63.68	59	57.33
2.(6/01/2021)	135	36	71.62	44	72.43
3.(8/01/2021)	132	29	80.85	33	76.6

Waste water sample

- Total suspended solid

Sample no and date	TSS in mg/lit				
	Sewage	R-1	Reduction	R-2	Reduction
(4/01/2021)	1274	461	64.13	544	58.31
(6/01/2021)	1069	437	59.16	534	51.03
(8/01/2021)	981	88	92.41	114	86.54

- Total dissolved solid

Sample no and date	TDS in mg/lit				
	Sewage	R-1	Reduction	R-2	Reduction
(4/01/2021)	137	47	64.25	32	77.78
(6/01/2021)	115	17	84.53	12	92.8
(8/01/2021)	113	22	81.43	25	77.93

Conclusion

From the experimental data it was found that vermi-bio sand filter is more efficient than non vermi-bio sand filter in efficiency of removal of BOD, COD as well as solids. Rsults of vermi-bio sand filter technology are most cost effective, odour free for treatment with efficiency, economic and potential decentralization. The percentage reduction in TSS, TDS, COD, BOD, fron Reactor-1 is 64-92 percent, 65-82 percent, 25-67 percent, 64-80 percent respectively while from Reactor-2 is 57-87 percent, 70-93 percent, 12.5-58 percent, 58-76 percent. The values obtained from the experimental are well within the limits, shows vermi-bio sand filtration system has good performance in treatment of grey water. This laboratory scale study may allow extension of methodology to applications like controlling water pollution in rural areas. The earthworms production, growth, breed and survive in the moist environment is very well was observed during the process of experiment.

Measuring pH value

Project group

14. WOMAN'S SAFETY DEVICE

COLLEGE	RAMRAO ADIK INSTITUTE IF TECHNOLOGY
GUIDE	MRS. SANDHYA DESHPANDE
COLLEGE STUDENTS	MEDHAVI DESHPANDE, MEDINI KAMBLE
SCHOOL STUDENTS	NIDHI SHARMA,ANSHIKA MAURYA
SCHOOL	SAINATH ENGLISH HIGH SCHOOL, CHRIST ACADEMY

ABSTRACT

Suraksha A Woman's Safety device is an embedded device which ensures the security and safety if woman is in danger. We cannot hope for sustainable development without peace, stability, proper self-defence knowledge and effective awareness to the women. 1 in 3 (35%) of women worldwide have violence in their lifetime. Violence and discrimination can blight women's lives and hold them back from playing a full part workplace, society and the economy. In cities women tend to work night shifts which is pretty much dangerous for them but in case of risky situation, women can use this device to send their location to the nearby police station within less time. Even in rural areas women are in danger so, this device will help them out and inform to nearby police station and ensure that they are safe.

PLANNING OF WORK /PROCESS

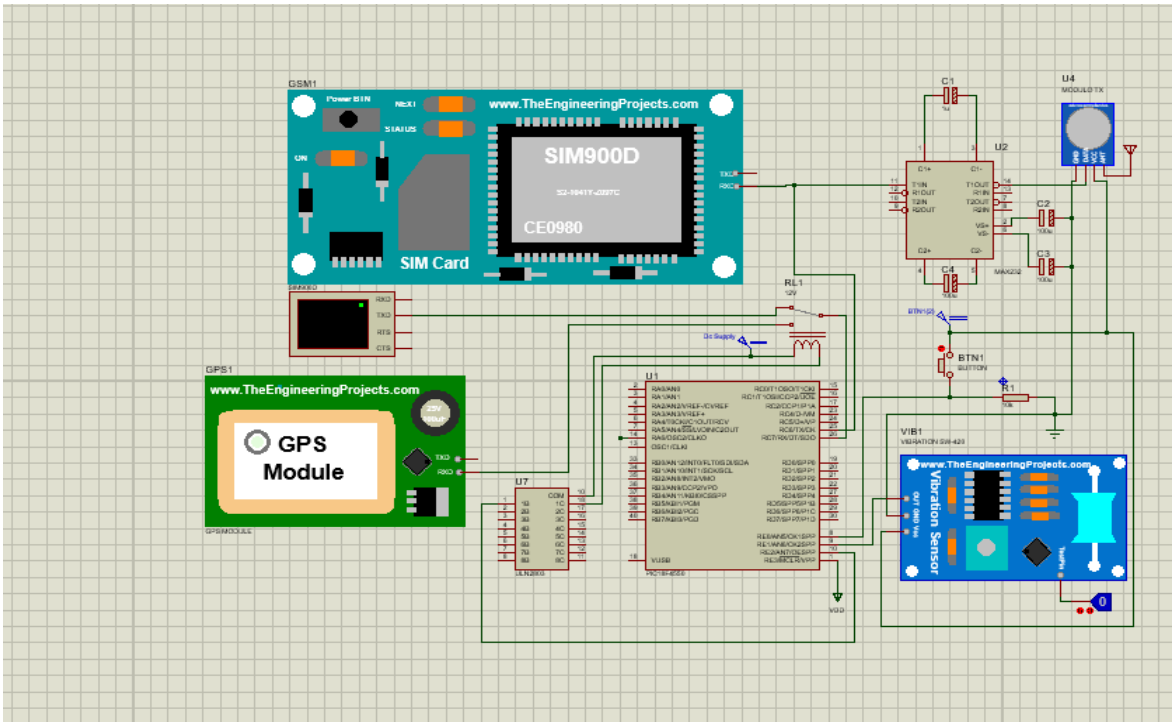

FIRST DEVICE WITH THE WOMAN

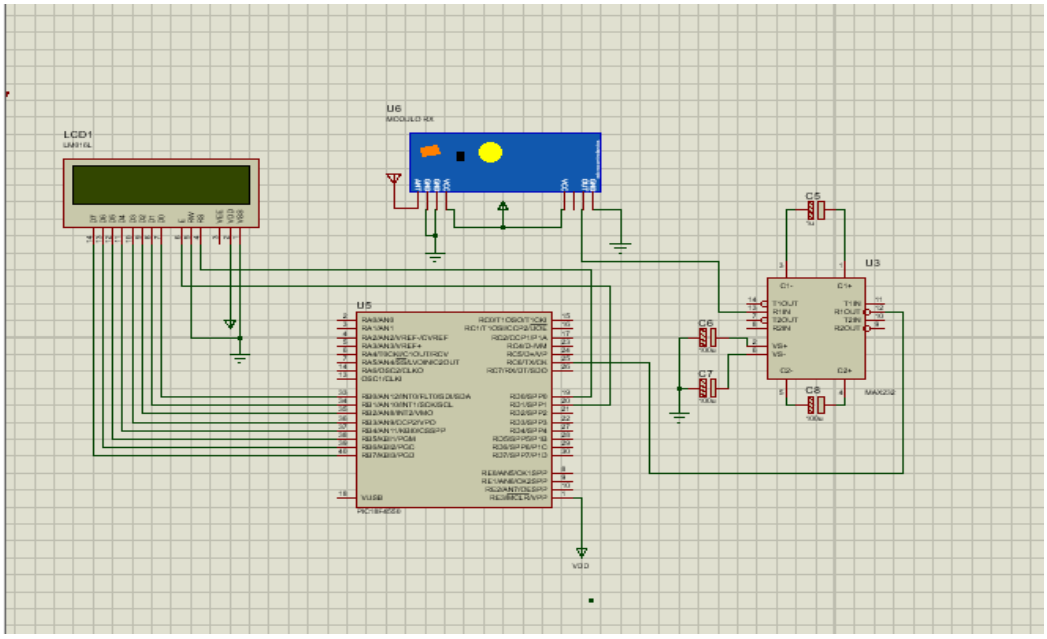

SECOND DEVICE AT POLICE STATION

METHOD

Surkasha A Women's safety is divided into two parts: First will be with the woman and second will be at the police station. The main components of the first device are PIC Microcontroller, GPS module, GSM module, MAX232 and Modulo Transmitter. The device has three inputs – the button, the vibration sensor and the sound input. If any of this input is activated the exact location that is longitude and latitude of the victim will be send to the near ones through GSM module which is a mini mobile included in this project. The MAX232 will convert the voltage level for the communication. As the communication occurs at different level of voltage. The received data will be send to the police station with the help of Modulo Transmitter. At the police station there will be Modulo Receiver which will receive the data that was send by the victim's device. Then again, the voltage level will be converted by the MAX232 for the further process as the other devices will work at the different voltage level. The micro-controller will receive the location and it will display on LCD.

PHOTOGRAPH OF STUDENTS LEARNING

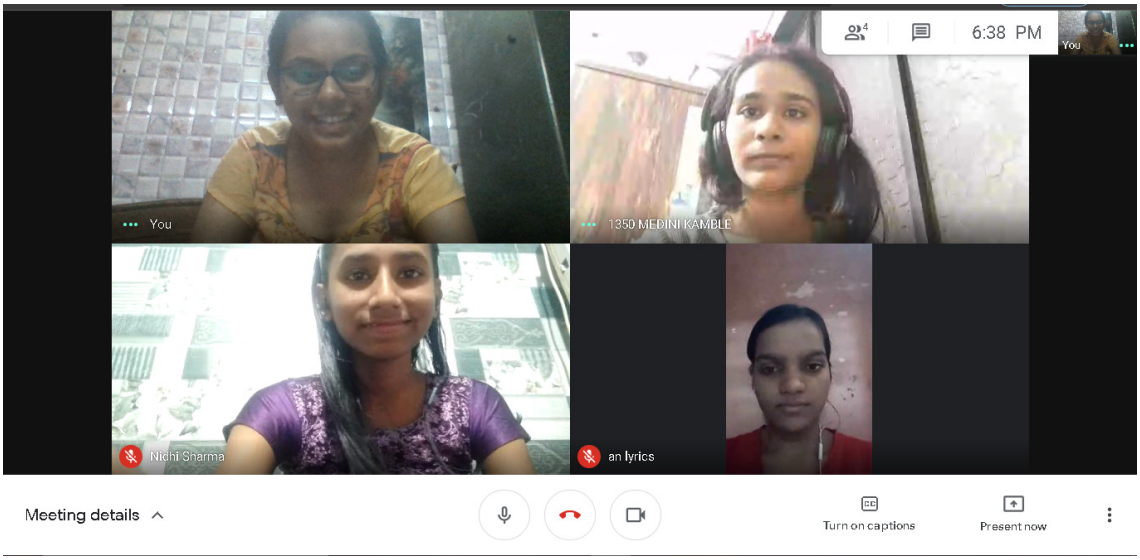

BENEFITS

Woman's Safety Device benefits include the following:

- It is a portable device.
- Multiple requests can be sent at a time.
- It is cheap than other branded safety device.

SUMMARY

This device is portable and will easy to implement. There are two parts of device one with victim and other at the police station.
The area this device will cover up to 30km of range.
COST
The total cost of this project is rupees 3500/-

15. SMART GADGETS FOR BLIND HUMANS USING IOT

COLLEGE	SANGHAVI COLLAGE OF ENGINEERING, NASHIK
GUIDE	PROF. PUSPENDU BISWAS
COLLEGE STUDENTS	RohanSonawane, RutujaJaste
SCHOOL STUDENTS	Harsh Pawar, SumeetGangurde
SCHOOL	SHREE RAM VIDYALAYA, NASHIK

ABSTRACT
Visually impaired people find difficulties detecting obstacles in front of them, during walking in the street, which makes it dangerous. Smart Gadgets for blind people come as a proposed solution to enable them to identify the world around. In this we propose a solution, represented in a smart gadget include two gadgets. The Smart Stick and The Smart Goggles. The smart stick is as the name suggests is a device for the visually impaired to guide the user to respective destination and avoiding to collide with the obstacles. In a smart stick with infrared sensor to detect obstacles like wall, rocks, stair-cases and more obstacles and the fire detection sensor for detecting fire and the water detection sensor for detecting water ponds in their way both the sensors are attached at the bottom of the stick. In the smart stick we have used the GPS for locating the person who have the stick in his hand and the sim card toolkit for sending emergency message to its saved contacts in the case of emergency. In smart goggles we have used pair of ultrasonic sensors for detecting obstacles in front of the person and vibration motors for alert the person. We have used the camera with the raspberry pi on goggles for detecting manholes on the roads, staircase and the obstacles like walls.

PLANNING OF WORK /PROCESS
For Goggles: -
2 Vibration Motors
1 Arduinonano
2 ultrasonic sensors
1 camera & 1 Raspberry Pi
For Facial recognition / Man hole Detection

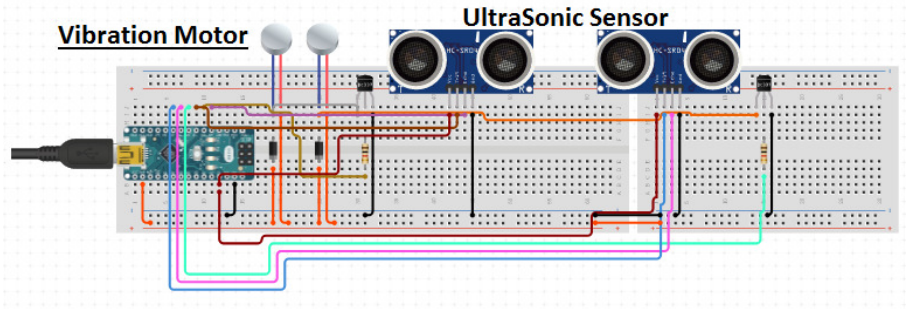

For SMART STICK : -
1 Arduinonano
1 Fire Sensor
2 IR Sensor
1 Buzzer
1 Water Sensor

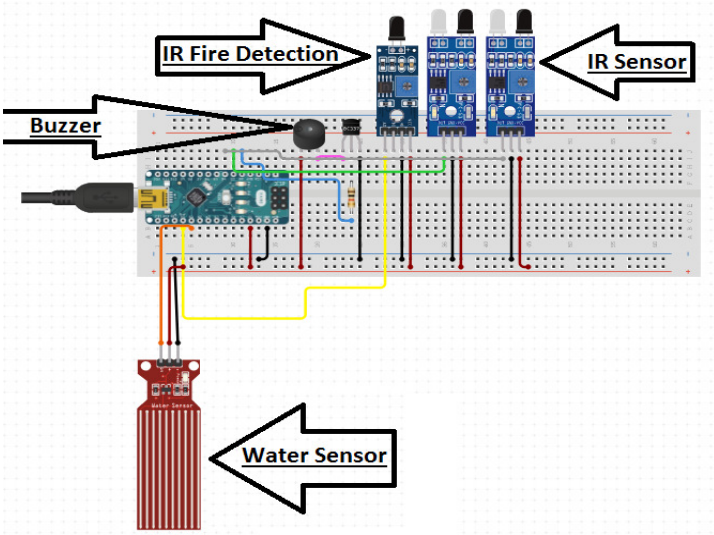

For Tracking System over SMART STICK: -
1 GPS – Neo 6M
1 SIM Toolkit – 800L
1 Push Button

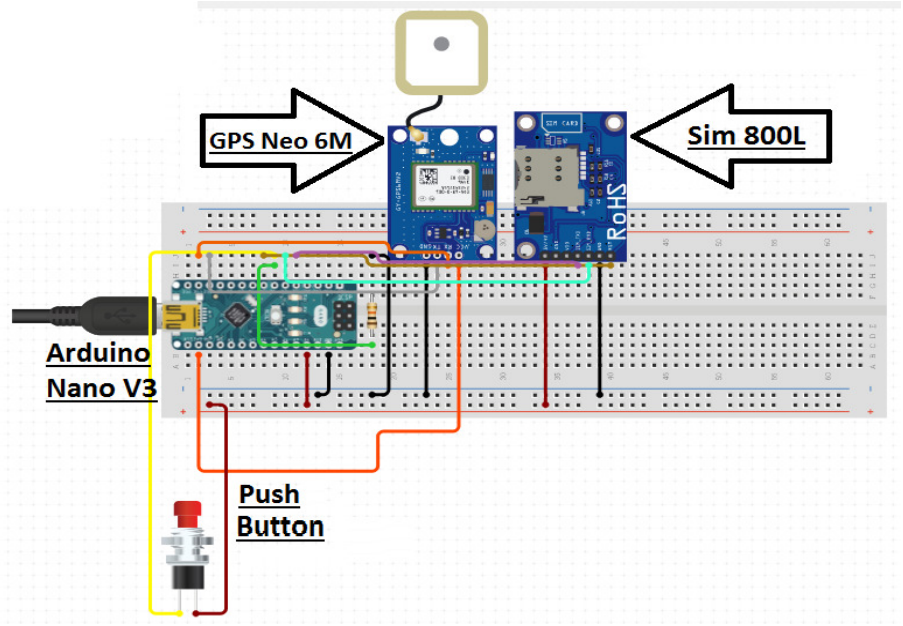

METHOD

For smart stick we have used IR sensor for detecting obstacles, fire sensor for detecting fire, water sensor for detecting fire all the sensors are used in bottom of the stick. For the tracking system we have used the neo 6m GPS for getting location of stick for Realtime or in the case of emergency. We have also used the Sim 800l for the emergency message for the registered contact numbers with the Live GPS co-ordinates.

For the smart goggles we have used the pair of ultrasonic sensors for detecting the obstacles which are nearly in the range of 1 metre from the person the ultrasonic sensors give the output through the Arduinouno board and vibrates the vibration motor. On the smart goggles we have used the camera with the raspberry pi for detection of obstacles like manhole, staircases and more obstacles which can be the danger for the blind humans

PHOTOGRAPH OF STUDENTS LEARNING ONLINE:

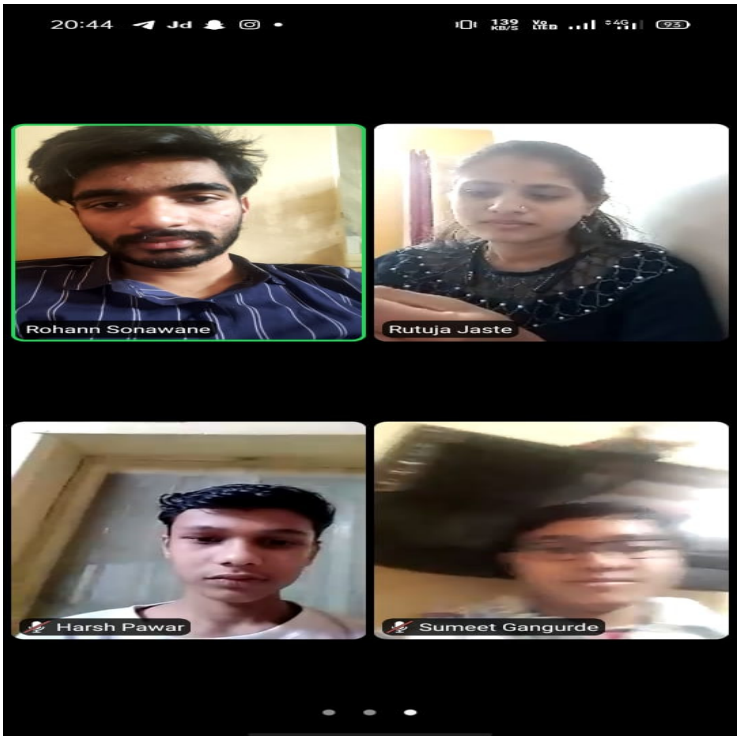

BENEFITS

Smart Gadgets for benefits include the following:

- Blind humans can walk on the street without taking anyone's help.
- Blind humans can send the emergency message to the its important contacts.
- Blind humans can walk in rush places.
- Blind humans can follow the queue for any of their office or personal work.

SUMMARY

Did you know that a small accident of blind person makes them more dependent?

Smart gadgets for blinds prevent and informs the blind people for the blind people.

COST

The total cost of this project is rupees 2000/-

16.WAREHOUSE AUTOMATION

COLLEGE	
GUIDE	
COLLEGE STUDENTS	ShrutiKharmale,MansiLende,SonaliSaroj
SCHOOL STUDENTS	ShreyaGaikwad,ArjunGaikwad
SCHOOL	

INTRODUCTION

Automationplaysanimportantroleinindustries,manufacturing,production,videosurveillance, retail, mining, supermarkets, at home and so on. It emphasizes in making anyprocess automatic that increases productivity, accuracy, safety by reducing time and humanefforts. In large industries, for storing inventories like small spare parts (nuts, bolts, needles,small components, pallets etc) and in cold storages for storing food, vegetables, medicines,foods and drugs, cold drinks, chemicals and a considerable amount of space is consumed inwhich handling of materials is difficult. But the important thing is not only to increase thestorage volume also to operate the system quickly and smoothly with right algorithms insystemrequirements.

Automatic storage and retrieval system (ASRS) were originally introduced in 1950s. Actuallya typical auto warehouse with ASRS consists of multi aisles with storage racks. ASRS haspassed with different steps and processes for the development for using high quality and bestperformance.Inmodernmanufacturingenterprise,byusingwarehousewithautomatedstorage and retrieval system (ASRS) we can effectively manage the space constraints if anyand the overall floor space area is reduced. Also, material handling will be easier and efficientdue to the fact that there will be minimal requirement of manpower. Warehouse

automationenables a warehouse operation toachieve greater outcomes with significantly less effortthroughtheuseofoneormoretechnologies.

1.1 PROBLEMSTATEMENT

Warehouse operation tends to be labour intensive and requires large space for facilities. Largebuildings are required to store the items in racks, to move stock, to store and to retrieve. Thestorage and retrieval of the items is the main task is often repetitive and sometimes results inbreakage of items. With the advent of e-commerce, companies stores millions of unique itemsand handle large and variable daily order volumes. On the other hand, the most laborious andexpensiveprocess order picking is repetitive and requires high quality labour willing to workinshifts whichisdifficulttoget.

1.2 APPROACHTOWARDSPROBLEMSTATEMENT

The objective of the project is to aid and improve the existing warehouse management systemthat occupies man-power, on paper data recording and non-intelligent machines during theoperation in order to overcome the problem mentioned in the statement above. The proposedsolutionconsistsof RFID card/tag, RFID card/tag reader; forklift Mechanism,Racks, Product, Computer. RFID card/tag contains the details of the product like position(where to be placed on the rack), time, date, Product Number. As our project will be designedas a prototype model racks here used will be of 3x3 sizes. Computer will be used to store thedataofthe productwhichiscontainedintheRFIDcard/tag.

PROPOSEDSYSTEM

The figure below represents IOT based warehouse management system. The proposed systemconsists of two main parts i.e the storage and the retrieval of the products. Lift plays animportant role in case of storage system while the Application plays an important role in caseofretrievalsystem.The blockdiagramofthe proposedsystemis asfollows:

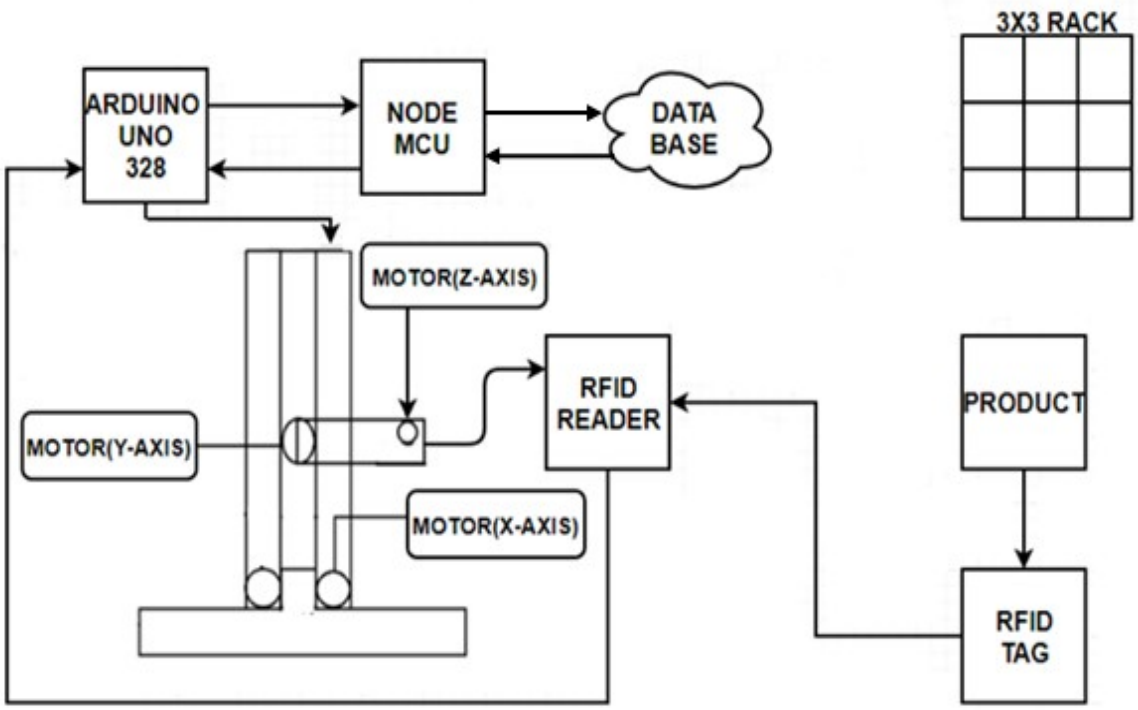

Figure2.1BlockDiagramofIOTBasedWarehouseAutomation

The block diagram of the proposed system can be understood by stepwise description abouteachsubsystemwhichis explainedbelow.

1. PowerSupply :

   The Power Supply provides power to the Arduino UNO 328 to turn ON the System. ASMPS which provides +3.3V, +5.5V and +12V is used as main power source to the ArduinoUNO328module.

2. RFIDCard:

RFID card contains the product information such as date and time, name of the productandits positionontherack.

3. RFIDReader:

The EM18 RFID reader is a passive readerwhich scans theinformation mention in thetagandtransmitsthemtothe processor.Itactsasinputtothe processor.

4. Arduino UNO 328 :

Arduino UNO is the main brain of this system. All other sub-systems are interfaced withit. It receives the scanned information from RFID reader and accordingly it will givecommandtothelifttoloadthe product.

5. Lift :

Liftconsists of three axis (X, Y and Z). X and Y axis will move the productverticallyandhorizontallywhileZaxisis usedtodrive the pallet.

6. NodeMcu:

NodeMcu is used as a wifi module which receives inputfrom arduino328 and itwillsend the information receivedfrom arduinoto application to maintain theinventorysystem.

7. StorageRack:

It is the location for the lift to neatly arrange the product in the multi-storey rack. In thisprototype developmentthere are 9slots(3x3)forstoringthe object.

2.1 WORKINGOFSYSTEM

The working of the proposed system is dividedinto two main parts the storage and theretrieval. The storage system consists of RFID

tag, RFID reader, Arduino Uno 328 , Lift mechanism and Node MCU. There trieval system consists of Node MCU, Application(Software) and Lift mechanism.The detailed working of the system is as follows:

STORAGESYSTEM:

- As soon as the tag comes in contactwith the RFID reader, the RFID reader willscan the information mention in the tag and transmitthem to the processor. Thenthe processorwillgive the commandtolifttoloadtheproduct.
- The lift consist of three axis (X, Y, Z) ,the Z axis will drive the pallet to load theproduct. X and Y axis will move the product horizontally and vertically to store initsdesiredposition.
- The NodeMcu will be used as a wifi module which will take the data about theproductfromprocessorandstorethemtothecloud.

RETRIEVALSYSTEM:

- The retrieval system consist of an application (Blynk) through which we can givecommand to the lift through processor to retrieve the product from the desiredposition.
- As soon as the product is retrieved the information about the empty position of therackwillbegiventotheuserthroughcloud.

2.2 LIFTMECHANISM:

The Lift Mechanism consists of three alignments i.e Alignment of X-Axis, Alignment ofY-Axis, Alignment of Z-Axis. X-Axis and Y-Axis are controlled by the stepper motorseach,whereas Z-Axisis controlledbytheDC Motor.

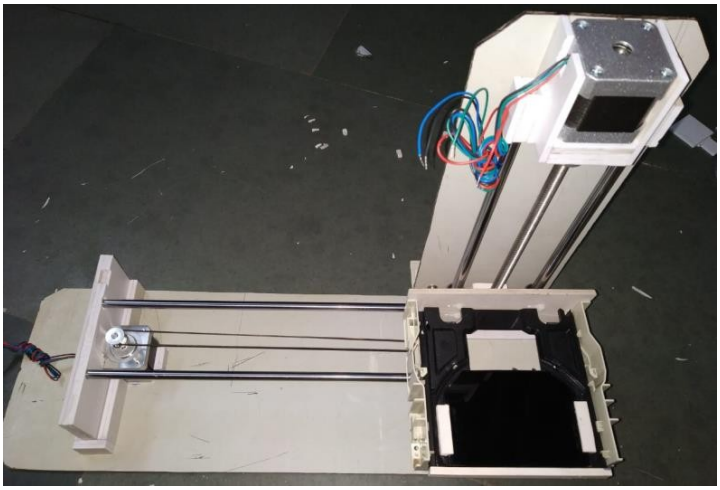

Figure2.2 OverviewofLift Mechanism

Thedetailedworkingoftheseaxesisexplainedbelow.

(A) WorkingofX-Axis:

Nema 17 bipolar stepper motor is used for the movement of x axis. With the help oftwo smooth steel rod and conveyor belt, the lift moves on the track. The movement oflift is made easy by using 4 linear ball bearings which are fixed below the lift. Thedistance the lift moves depends on which rack the good has to be stored or from whichrackithas tobe retrieved.

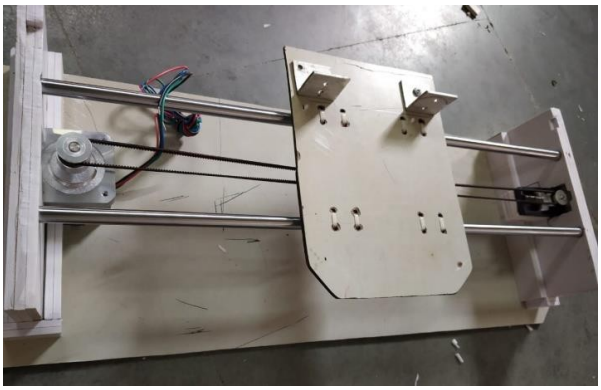

Figure2.3 Alignment ofX-axis

(B) WorkingofY-Axis:

For y axis movement i.e. vertical movement trapezoidal lead screw is used. If the leadscrew rotates in clockwise direction then the CD ROM which is attached to the leadscrew moves in upward direction. If the lead screw rotates in anti-clockwise direction,then the CD-ROM moves in downward direction. Depending upon the position of therack where the good is to be stored or retrieved, the rotation of the motor is pre-programmed.

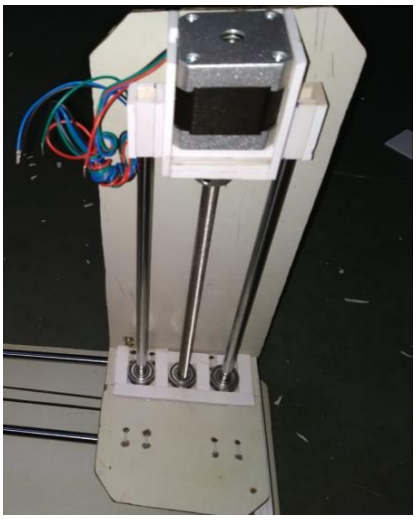

Figure2.4Alignment ofY-axis

WorkingofZ-Axis:

This movement of the lift is considered as the shortest. A CD-ROM of the CentralProcessing Unit is used for this movement. It is only used for loading and unloading ofthe goods. A DC motor is used for the forward and reversed movement of the CD-ROM.

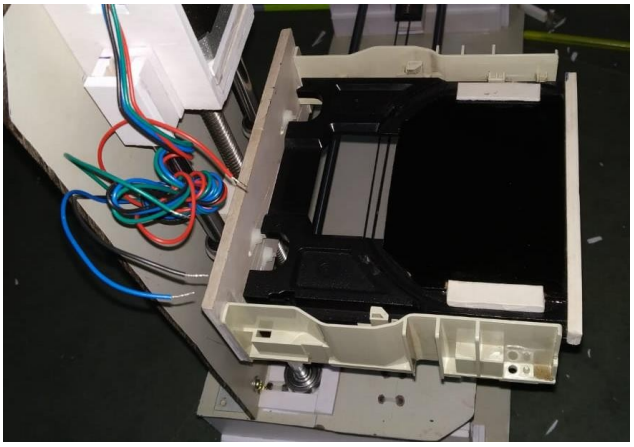

Figure2.5AlignmentofZ-axis

2.3 SYSTEMSINTERFACING

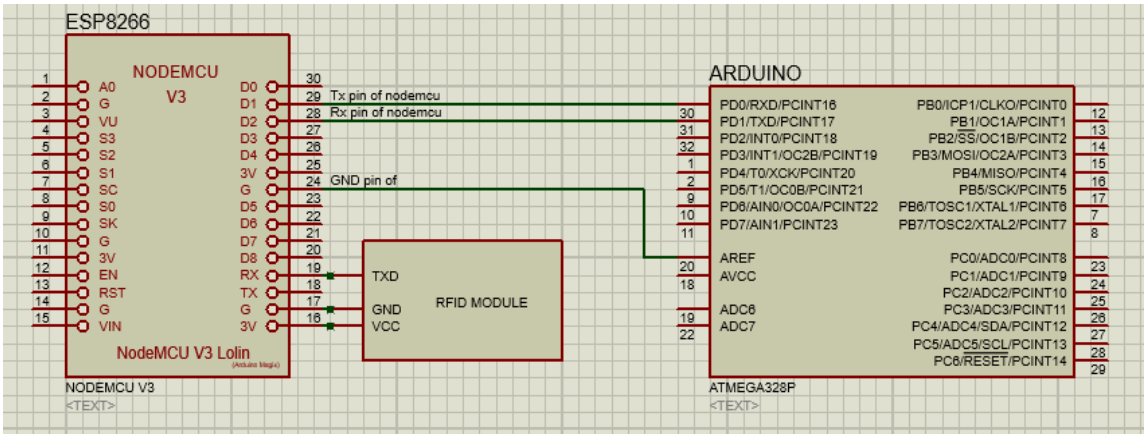

Figure2.6InterfacingofArduino UNO328withEM18 RFIDReaderModuleandNODEMCU

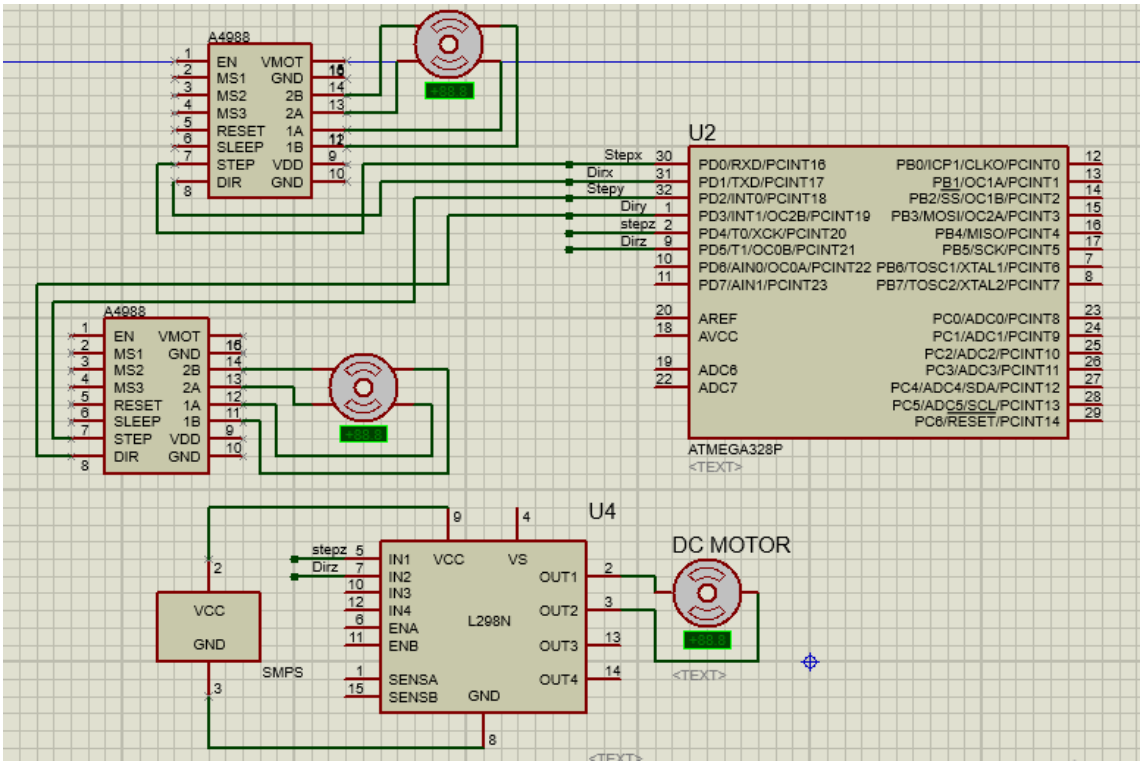

Figure2.7InterfacingofArduinoUNO328,StepperMotors,DCMotorandtheirDrivers

2.3.1 InterfacingofArduino UNO 328 withNodeMCU

- D1pinofNodeMCUis designedasTransmitter anditisconnectedtotheRXpinofArduinoUNO328.
- D2pin ofNodeMCUisdesignedasReceiveranditisconnected to theTXpin ofArduinoUNO328.
- GNDofbothArduinoUNO328andNodeMCUisconnectedtogetherattheGND pinofL298NMotorDriver.

2.3.2 Interfacing ofEM18 RFIDReaderModulewith NodeMCU

- EM18RFIDReaderModuleispoweredONbyconnectingVccpinofModuletoVinpinofNodeMCU.
- TX pinofEM18isconnectedtoRXofNode MCU.
- GNDofEM18ModuleisconnectedtoGNDofNode MCU.

2.3.3 InterfacingofL298NMotorDriverwith NodeArduino UNO 328

- L298Nis a dual of H Bridge MotorDriverwhich allows speed and directioncontrolofDC Motor.
- The Module has an ON-Board 78m05 5V regulator it can be enabled or disabledthroughajumper.Whenthejumperisinplacethe5Vregulatorisenabledsupplying logic power supply(Vss) from the Motor power supply(Vs). In this case5V inputterminalactasanoutputterminal.
- This is used to power up the Arduino UNO 328 and Node MCU which requires 5Vpowersupply.
- 12V power supply is given to L298N driver through SMPS and GND terminal isconnectedtotheGNDofSMPS.
- The1N1and1N2controlsthespinning directionofmotors.

SYSTEMHARDWAREANDSOFTWARE

3.1 HardwareDescription

3.1.1 ArduinoUNOController(ATMGA328)

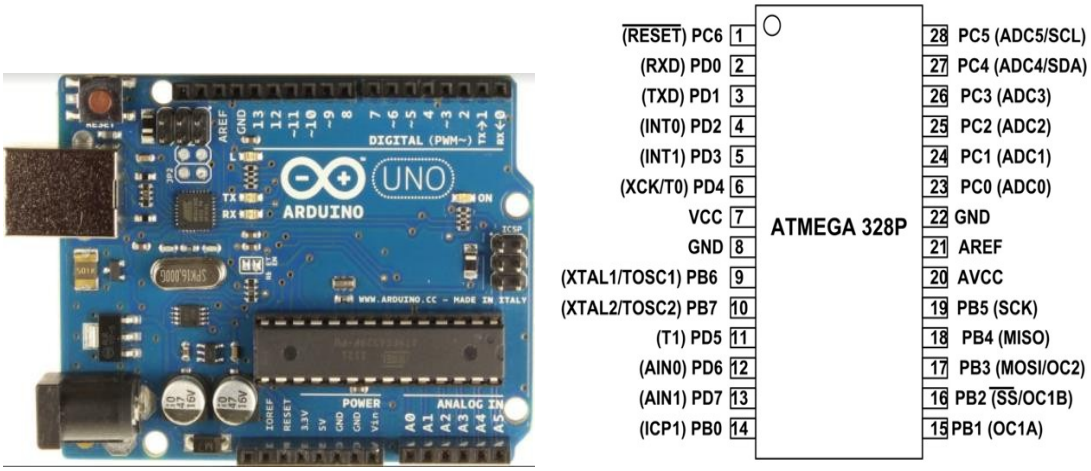

Figure3.1ATMEGA328
ArduinoboardandIC

Arduino is a single board microcontroller meant to make the application more accessiblewhich are interactive objects and its surroundings. The hardware features with an open-sourcehardware board designed around an 8-bitAtmel AVR microcontroller or a 32-bitAtmelARM. Currentmodel contains a USB interface, 6 analog input pins and 14 digital I/O pinsthatallowthe usertoattachvarious extensionboards.

3.1.2 EM18RFIDReader

Radio frequency Identification (RFID) is a wireless identification technology that uses radiowaves to identify the presence of RFID tags. Just like Bar code reader, RFID technology isused for identification of people, object etc. presence. EM-18 is used like any other sensormodule. When a tag is brought near the MODULE it reads the ID and sends the informationtocontroller. Thecontrollerreceivestheinformationandperformsactionprogrammedbyus.

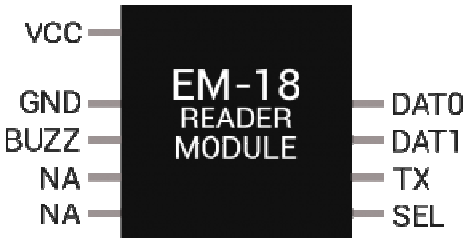

Figure3.2 EM18RFIDReaderandReaderModule

3.1.3 RFIDCard

Figure3.3RFIDCard

A RadioFrequency Identification Tag (RFID tag)is an electronic tag that exchanges datawith a RFID reader through radio waves. These radio waves transmit data from the tag to areader, which then transmits the information to an RFID computer program. Most RFID tagsare made up of at least two main parts. The first is an antenna, which receives radio frequency(RF) waves. The second is an integrated circuit (IC), which is used for processing and storingdata, as well as modulating and demodulating the radio waves received/sent by the antenna.Readinginformation from a RFID tag does not require line-of-sightand can be performedoveradistanceofafewmeters.

3.1.4 NodeMCU

NodeMCU is an open-source firmware and development kit that helps to prototype or buildIoT product. It includes firmware which runs on the ESP8266 Wi-Fi SoC from EspressifSystems, and hardware which is based on the ESP-12 module. The firmware uses the Luascriptinglanguage.ItisbasedontheeLuaproject,andbuiltontheEspressifNo

n-OSSDKfor ESP8266.ESP8266EXoffersacompleteand self-contained WiFinetworking solution.

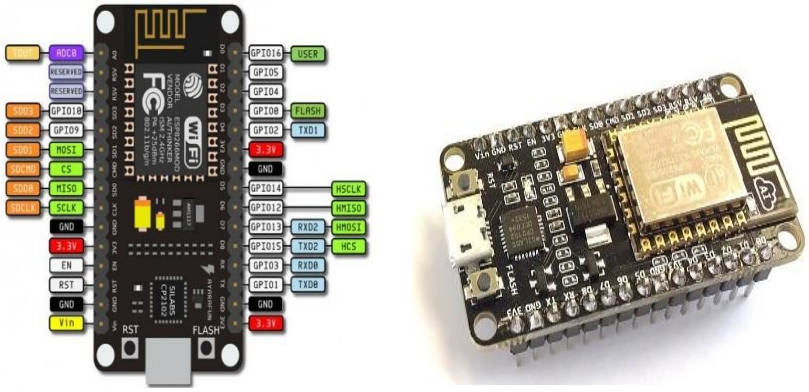

Fig3.4PinoutDiagramofNodeMCU

ESP8266EXhasbeendesignedformobile,wearableelectronicsandInternetof Thingsapplications with the aim of achieving the lowest power consumption with a combination ofseveralproprietarytechniques.

3.1.5 NEMA 17StepperMotor

Figure3.5 NEMA17StepperMotor

Thesteppermotorsmoveinpreciselyrepeatablesteps,hencetheyarethemotors ofchoicefor the machines requiring precise position control. The Nema17 4.2 kg-cm Stepper motor canprovide 4.2 kg-cm of torque at 1.7A current per phase. The Nema17 4.2 kg-cm Stepper motorprovides excellent response to starting, stopping and reversing pulses from stepper motordriver. They are very useful in the various applications, especially which demands low speedwithhighprecision.

3.1.6 StepperMotorDriver A4988

The A4988 is a micro stepping driver for controlling bipolar stepper motors which has built-intranslatorforeasyoperation.Thismeansthatwecancontrolthesteppermotor withjust2pins from our controller, or one for controlling the rotation direction and the other forcontrollingthesteps.

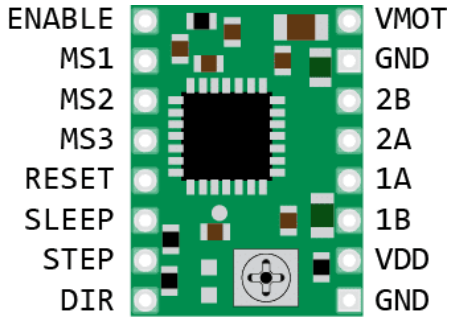

Figure3.6PinDiagramofStepperMotorDriverA4988

The Driver provides five different step resolutions: full-step, haft-step, quarter-step, eight-stepandsixteenth-step. Also, it has apotentiometerforadjustingthecurrentoutput,over-temperaturethermalshutdownandcrossover-currentprotection.Itslogicvoltageisfrom3to 5.5 V and the maximum current per phase is 2A if good addition cooling is provided or 1Acontinuouscurrentperphasewithoutheatsinkorcooling.

3.1.7 BrushlessDCMotor

Figure3.7 BrushlessDCMotor

A brushless DC motor (also known as a BLDC motor or BL motor) is an electronicallycommutedDCmotorwhichdoesnothavebrushes.Thecontrollerpr

ovidespulsesofcurrentto the motor windings which control the speed and torque of the synchronous motor. Thesetypes of motors are highly efficient in producing a large amount of torque over a vast speedrange. The basic working principle for the brushed DC motor and for brushless DC motor aresamei.e.internalshaftpositionfeedbacks.

3.1.8 DriverL298N

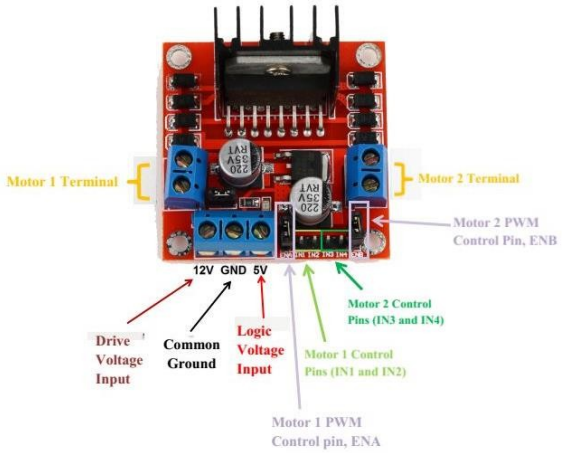

Figure3.8 DriverL298N

This dual bidirectional motor driver is based on the very popular L298 Dual H-Bridge MotorDriver IC. This module will allow you to easily andindependentlycontrol two motors of upto 2A each in both directions. It is ideal for robotic applications and well suited for connectionto a micro-controllerrequiringjusta couple ofcontrollinespermotor.

3.2SoftwareDescription

BLYNKAPPLICATION

Blynkisahardware-agnosticIOTplatform with white-labemobileapps,privaeclouds,device management, data analytics, and machine learning.It is a Platform with IOS andAndroid apps to control Arduino, Raspberry Pi and the likes over the Internet. It’s a digitaldashboard where one can build a graphic interface for your project by simply dragging anddropping widgets. It can control hardware remotely, it can display sensor data, and it can storedata,visualizeitanddomanyothercoolthings.

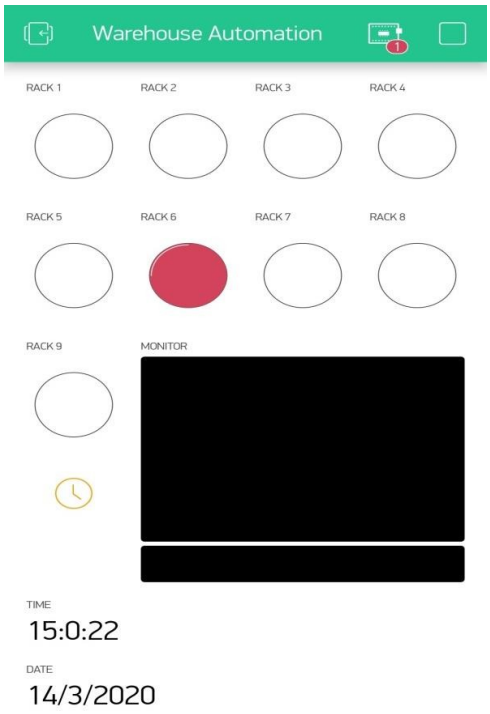

Figure3.9 BlynkApplication

CONCLUSION

Warehouse is a key part of the supply chain and primarily aims to control the movement andstorage of materials within a warehouse and process the associated transactions includingreceiving, put away and picking. As a result company's processes gain efficiency, cost savingsand labour management. In the beginning, warehouse inventory management system couldonlyprovidesimplefunctions,mostlyjuststoragelocationinformation. Nowadays,thebreadth of warehouse management functionality can vary greatly, from basic best practices inpick,packandshipfunctionalitytosophisticatedprogramscoordinatingadvancedinteractions with material handling devices. The system can also help a company to fulfilordersmore rapidlyandinstantaneouslytraceorderedproductswithina warehouse.

The main idea of the project was to introduce unique services in commercial and industrial fields. In addition item power

edtheteamtothinkinawaytosolvetheproblemsofstorekeepersandworkers whosufferintransferringdifferentitems.Theold-fashioneddesigned depended on manual system using labourers with cost in liabilities of the company.According to the industrial development it was must to find solutions to the problems ofwarehousing andinventory management. The system has thequality of supporting theseprocesses effectively in the picking areas and in work stations for dispatching and packagingas well. The system is based on IOT which is considered one of the most likely type oftechnology investment in the Warehouse. It provides a free flow of real time data. Informationtechnology experts can then analyze the data and use the information from smart devices. Inthe end, the overall goal of warehouse management system software is to achieve a paperlessenvironment that directs your employees automatically on the optimal picking and shipping ofyourproducts.

The Lift Mechanism is a very important part in the project which comes in the front to handlethe products and carry them. There are different movement in the storage and retrieval whichhave been completely acquired with vertical, horizontal and the shuttle as the forks in the previous work to move for wardan drever seonr acking system. These condimportantpartis handling of the database which is controlled by cloud computing system. The informationabout the products available in the warehouse gets stored on the server so that it can be easilyaccessible from anywhere. The proposed system therefore has many advantages which arehighlightedas follows:

- Theliftmechanism is capable of transporting goods through warehouse environmentwithoutdrivers andsupervision.
- WMS software provides real time data on inventory through serial numbers and RFIDtagging. This method enables users to document each item as it enters the warehouse

forloadingintothe storage sectionuntounloadingfromthe storage section.

- The cloud technology analyzes the incoming data, identifies the location, the status of the product and also allows user stomonit or the inventory using devices like smartphones or alaptopfromanywhereinrealtime.

- The system reduces the variable cost of operations by reducing the need for manual labourfor tasks such as picking, storing, assembly and inventory replenishment. Thus variablecoststsuchasovertimebenefitand payrolltaxesadding to thetotalcost ofmanuallabour.

Howeverdespiteoftheadvantageshighlightedabovethesystemisalsoacquaintedwithfewdrawbackslistedbelow:

- TheRFIDtagwhichisplacedontheproductatthebeginningofthestorageprocessisscannedmanually.
- Thepalletsoftheliftcannot drivetheproductswhichareheavy inweight.
- Liftisnoisywhenitisinmotionduringthestorageandretrievaloftheproduct.
- Problemsrelatedtoaccuratepositioningoftheproductoccursfrequentlyandhenceweneedtomanuallypositionthelift.
- Thesystemcannotbeimplementedwhenthereisnointernetas theprojectitselfisbasedonIOT.
- The project has passed with different five stages in design and components in stage one wherethe objectives were to provide materials and to build the structure. In the second stage therewas special methodology for storage and retrieval depending on the stepper motor and thepallet rack frame for loading and unloading products. The other mechanical components wereto control movement in available places. The third stage was about the storage modules thatused a unit for loading containers. The fourth stage focused on testing the components andgettingthedesiredresultswithqualityofoperation.Thelaststagewastoanalyzethedata.
- This project plan was designed in comprehensive method to cover the work tasks and toimplement different works. It was completely necessary to discuss

the objectives and goals ofthe projects before the plan brainstorming that include also the responsibilities and actions ofthe project.

4.1 FUTURESCOPE

1. RFIDtag ontheproductwhichisscannedmanuallyinthecurrentlyproposedsystemcanbe madeautomatedsothe scanningtimecanbereduced.
2. Shuttlerobotcanbeusedtowhichtakesthepalletandcarriesittothetransferpoint si.e,theliftmechanismsothatmanuallyloadingofthe productcanbe avoided.
3. Sincetherareproblemsrelatedtotheaccuracyandaccuratepositioningofthelif t,asteppermotorofexcellentqualityrevolutionperstepcanbeused.
4. Thesystemrequiresfewsecondsforprocessingthecommandswhichcanberedu cedbyanalyzingthesystem.
5. Camera can be fitted onto the lift mechanism so that the owner of the warehouse can keepaneyeonthesystemfunctioning.
6. Sortingoftheproductdependinguponthesshapeandsizecanbemadepossiblewit hintheliftmechanism.
7. Moreexplorationandfurtherenhancementscanbedoneonstoringandretrieving ofthedatabasefromtheserver.

17. Smart Toilet System REPORT

ProjectTopic	SmartToiletSystem
Groupmembers	Simran SharmaAthulyaAnand
ProjectGuide	Prof.VandanaSawant
College Name	SIESGraduateSchoolofTechnology
Students Name	SanskrutiPatilJyoti
AreaofProject	InternetofThings(IoT)Database ManagementWebDevelopment
Introduction/Abstract	Aimstodetectuncleanpublictoilets. Publictoiletsexperiencelackofhygieneandcleanliness. Difficulttoappointanall-timeJanitorforhelp. AnAutomatedsystem (IOT)canreduce thejanitor'sburden. Designedforthemaintenanceofthetoilet&tosendtimelyupdates (throughSMS). MultiplesensorstobeinterfacedwithR-pi. Thisdetectsvariousparametersandpredictsthecleanliness. Allowsuserstopostcleanlinessratingsandreviewsonwebsites. Thus,thesystemservesasasocialcauseaswell
ProblemStatement	Indiarankslowonsanitationindex. Duetolackofawarenessabouthowtousetoiletsinahealthyway Numberofavailabilityoftoiletsandtheirimpropermanagement. Cleanlinessinournationisunderrisk. Hygieneisnotmaintainedinmanytoilets,especiallypublictoilets. Thisleadstoseveraldiseases,suchasMalaria,Hepatitis,Flu,Cholera,Typhoid,etc. Thereisalsoattimesleakingtapsinpublictoiletswhichleadstoalotofwastageofwater.

	• Inthecurrentscenarioofthepandemichygiene, sanitation&socialdistancingisimportant.
Objective & Outcome	• Promotethe"SwachhBharatAbhiyan" • Willcreateawarenessamongpeopleonhowtosmartlyusethetoilets • Management of public toilets smartly will encourage thepeopletomakeuseoftheavailablenumber ofpublictoiletsefficiently. • Aimstodetectuncleanpublictoiletsandpromote hygieneandsanitation • Waterusedwillberecycled. • Willbeusedinpublicplaces,i.e,accesstoallandaffordable. • Entirelyautomatedsystem. • Minimumhumaninteraction,inaccordancetosocialdistancingduringCOVIDtimes . • Renewableenergysourceassolarcellswillbeused
Block Diagram	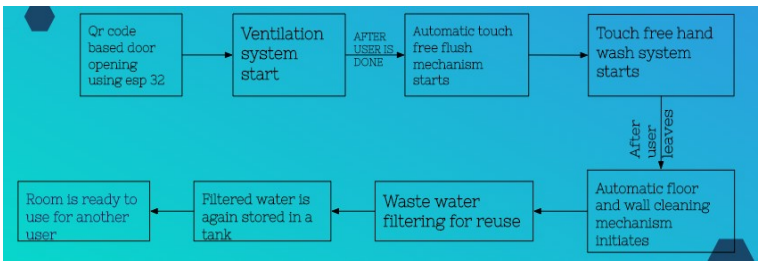

Methodology	1. A QR scanner-based door opening mechanism is designed such that only users who are registered will be allowed aftertheyscanthecodefromtheirsmartphones .Whenthecodeisreadsuccessfullydoorsopen. 2. Astheuserenterstheroomtheventilationandlightsystemstarts. 3. If the user is done, he has to pass his hand for 5 seconds infrontofanultrasonicsensorwhichenablestheflushandjetspraysystem. 4. Iftheuserhasusedtheroomforlessthan4minutesonly1.5litresofwaterisusedor5litresofwaterisused. 5. Thentheuserwalkstotheautomatichandwashsystemwhichworksonultrasonicsensors. 6. When the user leaves the room automatic walls and floorcleaningmechanismsstartwhicharebasedonwaterpumpsandamicrocontrollerdriver. 7. Thewaterusedinthecleaningsystemisfilteredandagainstoredforreuse 8. After this process if the smell sensor and water level andpuritysensorresultsarepositiveanotherusercanusetheroom.
Hardware Requirement	

NAME	DETAILS	PURPOSE
HC-SR501 (70 RS)	PIR sensor	Detecting a person in a cubicle
HC-SR04 (60 X 5= 300)	Ultrasonic sensor	Detecting water level in tank
YF-s202 (450))	Flow meter based on hall effect	Calc rate of water flow
MQ135 (65)	Smell Sensor	To detect any foul smell
Raspberry Pi 3B+ (2530)	Single board computer	Controlling sensors, collecting & uploading data to the cloud and sending notifications

NAME	DETAILS	PURPOSE
ESP 32(380) L293D(100)	QR code scanner Microcontroller driver IC	To open the doors
Water Motor (150 X 2)	-	To supply water to cleaning sprays & flush system.
Water Jet Spray & Water tank (200 & 500) Water filter(700)	-	To supply water for cleaning To distill water for reuse
Solar Panel(700)	12 W	To produce energy

TOTAL COST = Rs 6,295

Applications &Advantages	*Applications:* • Sensitizingpeopletheimportanceofsanitation. • Spreadingawarenessontoiletusage. • Preventionofvarioussourcesofcontamination. • Canbeusedbymunicipalcorporationsinruralareas,publicplacesandprivatesectorslikemalls andofficesetc. *Advantages:* • Curbingtheescalationofdiseases. • Transparencyinthesystem. • MinimumHumanContact • Promotingamajorstepforahealthyenvironment.
Differenceand Novelty compared topreviouslyimplementedsystems	• MODIFICATION:Minimumhumancontactandcompletelyautomatedsystem • FEASIBILITY:Projectis100%capableofbeing implementedtoachievecleanandhygienestandards. • TEACHING:Couldhelpchildrenandadultsofallagegroups toattainknowledgeandimportanceofsanitation. • LEARNING:FocusingonIoTandalongsidelearningmany newconceptsofMachineLearning,DBMS andWeb development.Gettoexplorethemechanismofseveralsensors andcomponents <u>InAccordance to the SDG of United Nations</u> • Ensurehealthylivesandpromotewell-beingforallatalltimes • Ensureavailabilityandsustainablemanagement ofwaterand sanitationforall • Ensureaccesstoaffordable,reliable,sustainable, andmodern energyforall

18. GESTURERECOGNITIONTOOLKIT.

COLLEGE	AMRUTVAHINICOLLEGEOFENGINEERING,SAMGAMNER
GUIDE	MRS.JOTI JADHAV
COLLEGESTUDENTS	KAKADSHRADDHA,DESHMUKHVAISHNAVI
SCHOOLSTUDENTS	SANKETJADHAV,SIDDHIAVHAD
SCHOOL	R.F.NAIKSCHOOL

ABSTRACT
Dynamic Gesture recognition system provide a natural,innovative andmodern way of non verbalcommunication.It allows people to interactwith machines in a natural way without use of I/O devices.Focusing ongesture recognition we use a camera to track the motion however weemphasisethetrackingoffingers as well as hand. In contrast with some specialized method spresented in the literature,thecurrentapproach is very generic and can be used withminimalmodificationfor recognizing a large variety of gestures.Classifier is used for thestaticgestures.As ainputitcanbecontrolelectricaldevicesvirtually.

KEYWORDS:

Humancomputerinteraction,Kinect,Gesturerecognition

GOALANDOBJECTIVES

Goal:

- Achievehandfreegesturerecognizationsystemtoavoiddirecttouch withsystem.
- Operatedevices likefan,tubelightbydoinghandmotions.

Theproposedworkaimsatrecognitionofunknowngesturesbysomestandard machinelearning algorithms.

Fewobjectivesofsystem-

Objectives:

- Makedynamictraningofgesture.
- maketouchlesssystem.
- Detectgesture inlowlightorinnightvision.

- Automatedevicesusingspeech.
- Systemmakenormalizationof humanskeleton.

SCOPEOFPROJECT

Projecthavewiderangeofscopesomeof thoseareas follow:

- ThissystemwillworkasoneoffuturisticofArtificialIntelligence andcomputervisionwithuserinterface.
- Systemalsocan beusedinschoolspeciallyforblindperson.
- The scope of this project is to build a real time gesture classificationsystemthatcanautomaticallydetectgesturesinnaturallightingcondition.
- Itscreatemethodtorecognizehandgesturebasedondifferentparameters.

The main priority of this system is to simple, easy and userfriendlywithoutmaking anyspecial hardware.

FlowDiagramof GestureRecognizationToolkit System

--

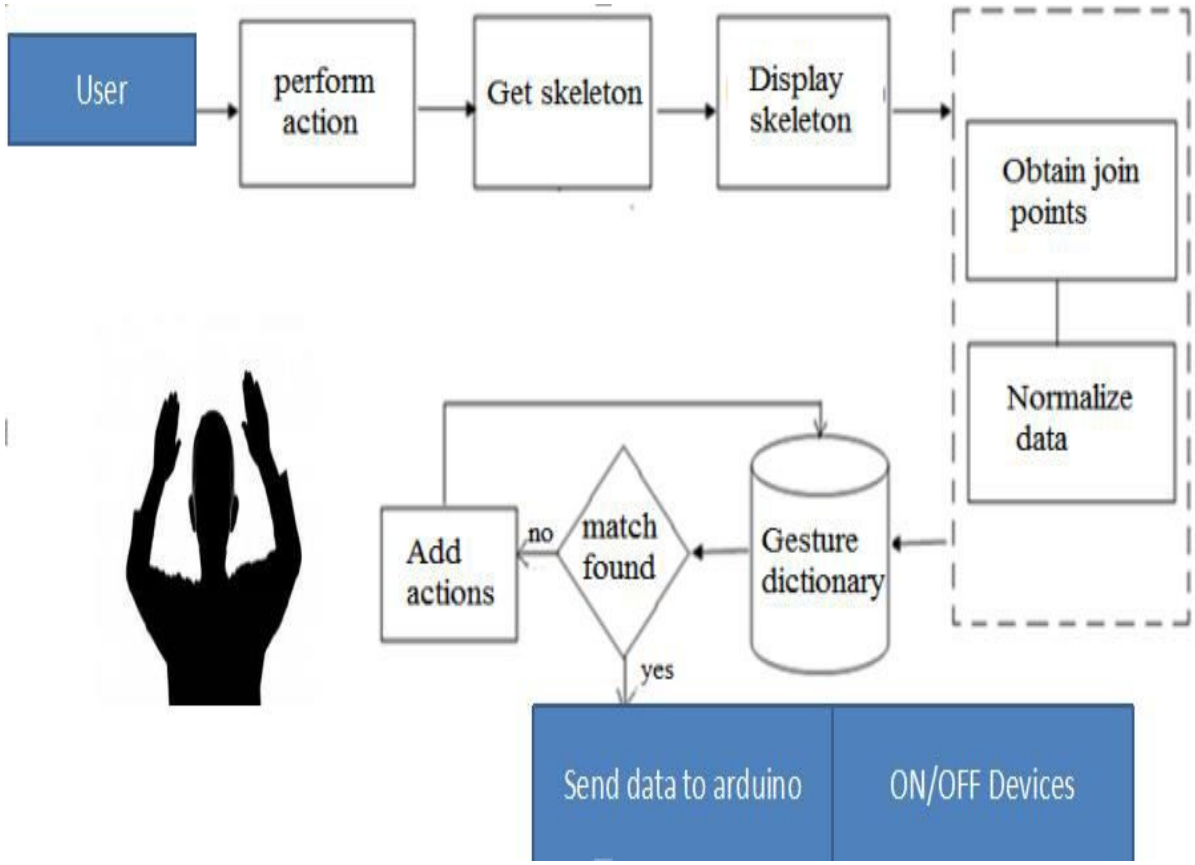

Fig-FlowDiagramof GestureRecognizationToolkitSystem

Theaboveblockdiagramshowsthearchitectureoftheproposedsystem. The user is in front of the camera doing a sign or getting readyto do so. A new frame is obtained and the video stream is updated withthe skeleton of the user overlappedonto it. Three main blocks areexecuted: the first block consists of obtaining the data of the joints ofinterest required for the frame descriptor, the second block consists ofnormalizingthesedata,andthethirdoneconsistsofgesturedictionary.

Then, if the working mode is set to TRAINING (meaning that the userisaddinganewsigntothetrainingset),theframedescriptorisaddedtothecorre-spondentfileofthedictionary.Otherwise,ifthemodeisset to TESTING (meaning that the user wants to translate the sign thatis been done), the frame descriptor is added to the current test sample.Then, the system checks if the current frame is the last frame of thesign. After a sign is finished and if the working mode is TESTING,thetestsigniscomparedusingaclassifierwiththesignsfromthedictionaryandaccordingtothatarduino controltheappliances.

METHODOLOGY

Skeletonrecognition-

The Kinect SDK offers free tools that can be used to develop simpleapplications for detecting and tracking the body/skeleton and the headof a person. Skeletal Tracking allows Kinect to recognize people andfollow their actions. Using the depth map, the sensor tracks up to 2users in details an recognize up to 6 users in the field of view of thesensor. The tracked features are the joints of the body skeleton, eachskeletonhaving a tracking ID.

JointRecognition-

Theskeletonismodeledasalistof3Dpoints(x,y,z)thatcorrespondsto20typesofjoints(HandLeft,HandRight,WristLeft,WristRight,lbowLeft,Head,Shoulder_Center,Spine,Hip_Centeretc.).ThislistofpointscanbeusedasinputfortheDTWalgorithmor for fun applications like finding a user's height, moving the mouseby using one of the joints, or changing the slides of a presentation bywavingthearm.Everyjointcanbeinoneofthefollowingthreestates: tracked for a clearly visible joint, inferred when a joint is notcompletely visible and Kinect infers its position based on the positionof neighboring points, or non-tracked if the point is not tracked at themoment.Edgedetectionisnecessaryforcapturingthesignificant

propertiesofth eobjectorhum anbodypartsep eratedbythejoi npartof body.

atdifferent positions of the room and consequently the data must bestoredaccordinglytothatposition.AsshowninFig2,a slightvariation in depth can cause a considerable variation of the X and

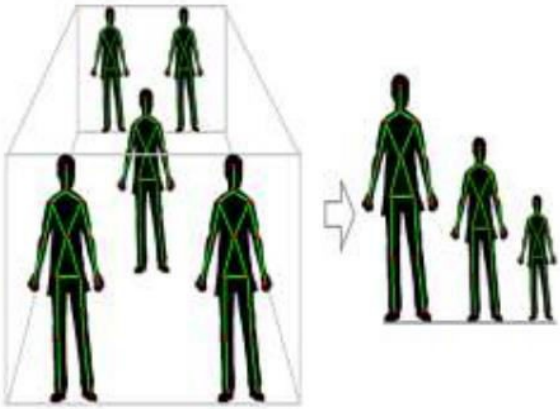

Normalization

The problem is that the skeleton size grows as the person movestowar ds the Kinect sensor. We need to build our system in a way to beindepende nt of the position of the person. The normalizatio nmusttake into account the position of the user. The deaf user can be

Yvalues.Thedistancesbetweenonejointandanotheron ecandrasticallyvarydependingon theposition of theuser.

Fig-:Normalizationrequiredforthepositionoftheuser.

DistanceCalculation-

UsingDynamic Time Warping (DTW) Algorithm find the distancematrix or find the accuracy between two skeleton in that algorithmfind the skeleton point and Add up all the minimum distances thatwere stored and this is a true measure of similarity between the twoseriesorskeleton thatpartstoredin dictionary.

MaintainingDynamicDictionary-

Successfullydetectinggesturesstoredinthedictionary withanaccuracyof91%

PHOTOGRAPHOFSTUDENTSLEARNING

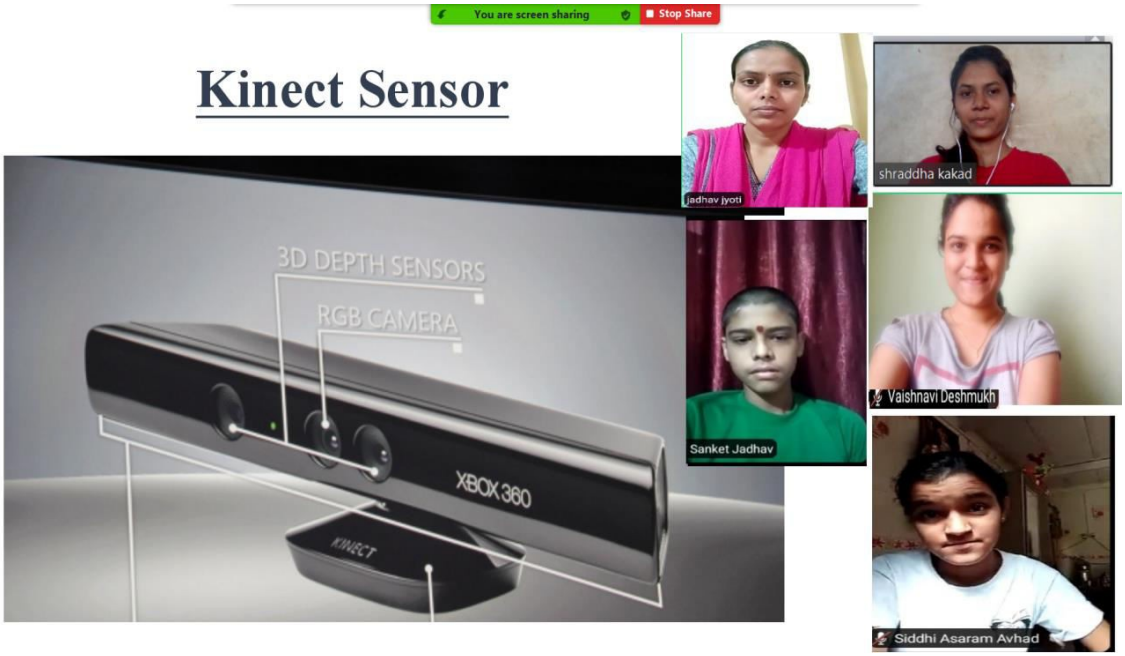

tingbackgroundandnoise.

- Recognizealargesetofhandpostureswithmoderatelyhighaccuracy.
- COST

The total cost of this project is rupees 6000/-

Costof Arduinouno:477

Cost of Kinect Sensor : 3,400Rel

Application

- Gesture Recognition is very significant for human-computerinteraction.
- Maintaindistanceandhomeautomation.
- Maintaintheconstantdistancebetween theuserandobjects byavoidingtheuserinterface.
- Detectionofthe inputbyelimina

a

y

1

2

v

:

5

3

8

Othercost:1000

CONCLUSION

The implemented system represents a typical interface for the naturalhuman computer interaction paradigm, without the help of classicalperiph erals like mousses or keyboards. The system can recognize staticgestures and more complex dynamic gestures in real time at up to 30framespersecond.

TherecognitionofdynamicgestureswasdoneusingtheDynamicTimeWarping(DTW)algorithmappliedonseriesof3Dfeaturesprovided by theKinect SDK (skeleton joints) or inferred from thedepth map (finger tips).The same data structures that were used fordynamicgesturesrecognitionwereusedtocreatetheclassificationmodelsforthestaticgestures.

Experimental results showed the feasibility of using the gesture as aremotecontrolinterfaceforcontrollinghome automationdevices.19. E-LearningManagementSystemwithOnlineExamPortal

I

N

T

R

O

D

U

C

T

I

O

N

Our Online Learning Management System in PHP and MySQL offers you to upgrade yourtechnicalskillsfromthe comfortofyourhome.Thisallowstheadministrationof studentlearningand teaching activities, facilitates

the communication of students, teachers, administrative staff,andtutors.Inthisway,thesystemoffersthepossibilityofspeedingupandsimplifyingthelearningprocess.Here,college/school/coachingstudents andinstructorsaretogethermixedto shareinformationutilizing amostly system based

structured course.

Createawebapplicationtobeusedin placeof oldpaper-baseduserexaminationprocess.

The objective of the Learning Management System PHP MySQL Source Code is to simplifythegenerationofstatisticaldataonthe academic activityof aneducationalinstitutioningeneral.

An online training system with a smooth and well-organized Graphical User Interface (GUI),easy to understand for the user from the first glance .Access to the e-Learning system fromanywhere.Maximum flexibility in the configurationofthe LMS system.

1.1PROBLEMDEFINITION

With the advent in technology and with the perpetual increase in the strength of the studentsandthenumberofdepartmentsintheeducationalinstitutions,itislaborioustoexchangethestudymaterialsbetween the students and thefaculties.

ThemainobjectiveoftheE-Learningistohelpthestudentsgetoverthetraditional methodsoflearning and make them accustomed to the internet where the notes for their respective subjectsare easily available. It provides an

automation procedure of studying the notes online. Theimplementation of this project helps both the students and the teachers. The teachers can uploadtheir notes on to the website by using their unique ID and the students can gain access to thesenotesby searching forthename ofthefileunder their respectivedepartment.

This project not only helps to facilitate easier access to notes for the students but also helpscutting down on expenditure for the universities as well. Students and Universities alike spend aconsiderable amount ofmoney on printingcosts which can beprevented.

ANALYSISMODEL:SDLCMODEL

The incremental model combines the elements of waterfall model applied in an iterativefashion. As in Fig 3.1 the incremental model applies linear sequences in a staggered fashion ascalendar time progresses. Each linear sequence produces deliverable increments of the software.When an incremental model is used, the first increment if often a core product that is basicrequirement is addressed but many supplementary features remain undelivered. The core productis used by the customer. As a result of use and/or evaluation, a plan is developed for the nextincrement.Thisaddressesthemodificationofthecoreproducttobettermeetth eneedsofcustomeranddeliveryofadditionalfeatureandfunctionality.Thisprocess isrepeatedfollowingthedeliveryofincrement,untilthecompleteproductisproduce d.Figbelowdepictsanincrementalmodelthatcontainsfivephases:

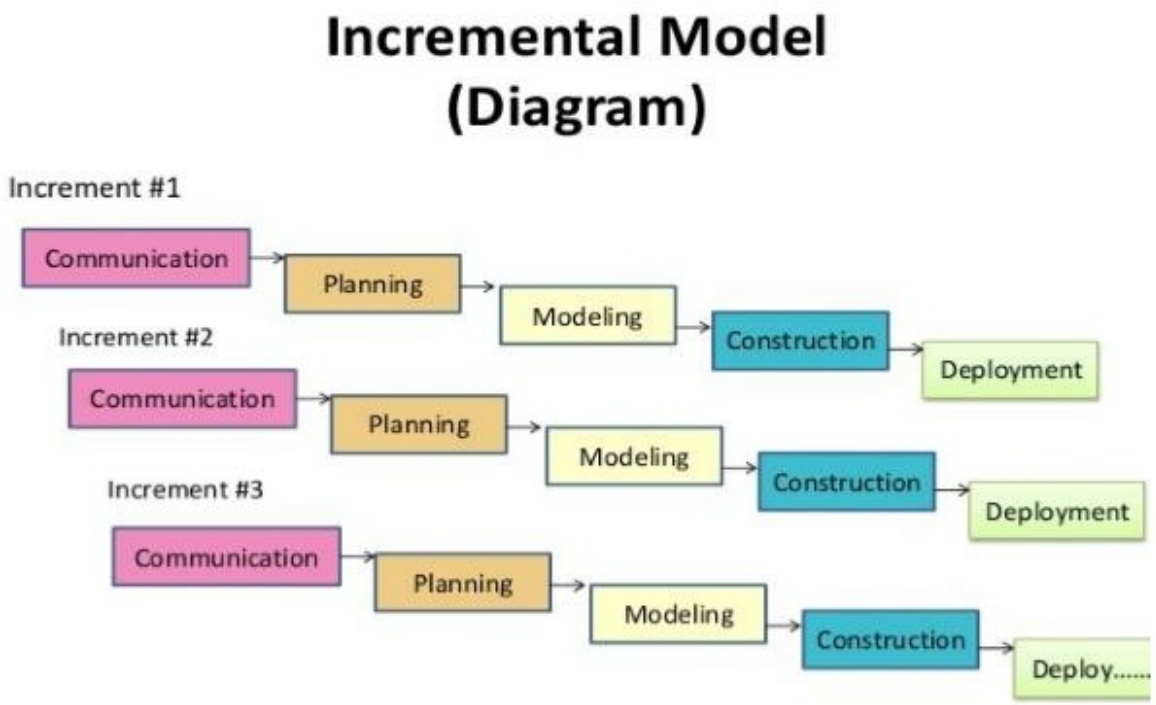

Figure3.1:
IncrementalModel

- Communication: Software development process starts with the communication betweencustomer and developer. According to need of project, we gather the requirements relatedtoproject.
- Planning:Itincludescompleteestimationandprojectschedulingandtracking.Alsoincludesestimation of project cost and time.
- Modeling: Tasks require building of one or more representations of the application. Itincludesanalysisanddesign.Itisamultipleprocessthatincludesfourattributesofprogramdatastructure,softwarearchitecture, interface representationandprocedural detail.
- Construction: Construction incrementally fills in the architecture with production readycode produced from analysis, design and implementation with testing of the functionalrequirements.
- Deployment: It includes delivery of the partially implemented project and takes feedback.Thefeedback is considered while reconstruction of theproject.

CHAPTER

4SYSTEMDESGIN

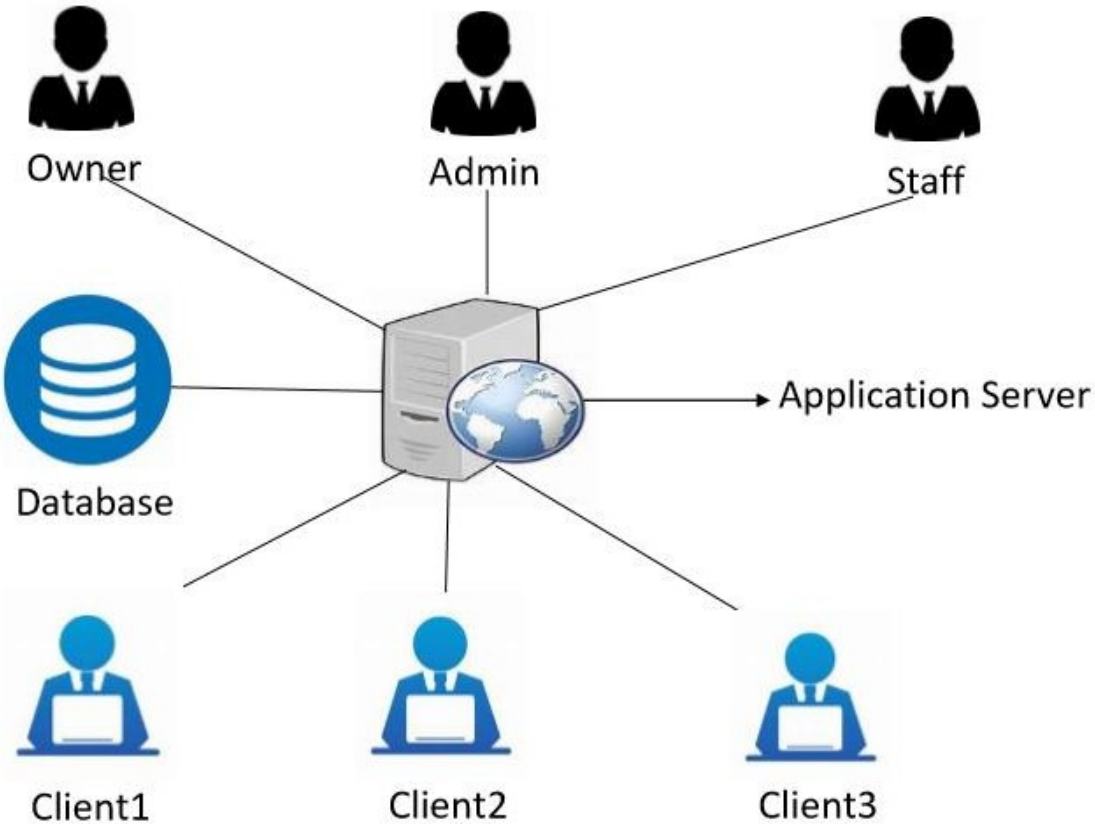

Figure4:SystemArchitecture

4.1 IMPLEMENTATIONDETAILS (MODULES)

1) UsersModule

Currentlywearesupporting 4 typesof users

• Owner

• Admin

• Student

• Parent

2) ParentsModule

• Enabled or disabled from Settings • Parent can add his children • Option to view the childrendetailedreports •Optionto buy exam onbehalf ofhis child

3) NotificationsModule

• Information Notifications will be created by admin and those will be displayed to user • AlertNotifications have the date range to display between specific dates • Can give short and longdescriptionsto it

4) AttendanceModule

Inthismodulethereisafacilityofrecordingtheattendanceofstudentsandkeeprecordofitforfurtheruse.

5) FeedbackModule

Studentscangivetheirfeedbacktoimproviseorifanyproblemsthatcanbementionedbystudentsintheir feedback.

4.2 WORKINGOFPROPOSED SYSTEM

- Practiceonlineexamsfor guestusers

1. Practiceonlineexamsareaddedforguestusers
2. Noneedofloginor registration

- Sectionalexams

1. Nowsectionalexam featureis providedin thisversion
2. Eachexamcan bedivided intosectionsand eachsection hasset ofquestions
3. Sectionwithandwithouttimer

- Extrasecuritylayer isadded

1. Nowthe userwho is takingan exam cannotcopy the contentsof theexam
2. Rightclick,selectprintcopy,cut,saveetc.keysaredisabled

- DynamicMultilingualsystem

1. Foranylanguage,noheadacheforupdatingthe languagestrings
2. Done.Oursystem willbuild the languagestringson its own..!

- QuestionBank

1. Allquestions aremaintained under this module
2. Supportfor7 type ofquestions

- LearningManagement System (LMS)

1) Withthisyoucancreatevideoclassesseries
2) Distributestudymaterials fordownload
3) LMSmay befreeor paid

4) Total7 typesofcontentsaresupported

- File
- VideoFile
- AudioFile
- VideoURL
- AudioURL
- Iframe/IntegrateYouTubevideos
- URLresource

CHAPTER5UMLDIAGRAMS

5.1 BEHAVIORALDIAGRAMS

5.1.1 USECASEDIAGRAM

The use case model for any system consists of "use cases". Use cases represent different waysin which the system can be used by the user. A simple way to find all the use case of a system isto ask the questions "What the user can do using the system?" The use cases partition the systembehavior into transactions such that each transaction performs some useful action from the users'pointof view.

Thepurposeoftheusecasetodefineapieceofcoherentbehaviorwithoutrevealingtheinternalstructureofthesystem.Anusecasetypicallyrepresentsasequenceofinteractionbetweentheuserand the system. These interactions consists of one main line sequence is represent the normalinteraction between the user and the system. The use case model is an important analysis anddesign artifact (task).Use cases can be represented by drawing a use case diagram and writing anaccompanytext elaborating the drawing.

In the use case diagram each use case is represented by an ellipse with the name of use casewritten inside the ellipse. All the ellipses of the system are enclosed with in a rectangle whichrepresentsthesystem boundary.Thenameofthesystembeingmoduleappearsinsidetherectangle. The different users of the system are represented by using stick person icon. The stickperson icon is normally referred to as an Actor. The line connecting the actor and the use cases iscalled the communication relationship. When a stick person icon represents an external system itisannotated by thestereosystem>>.

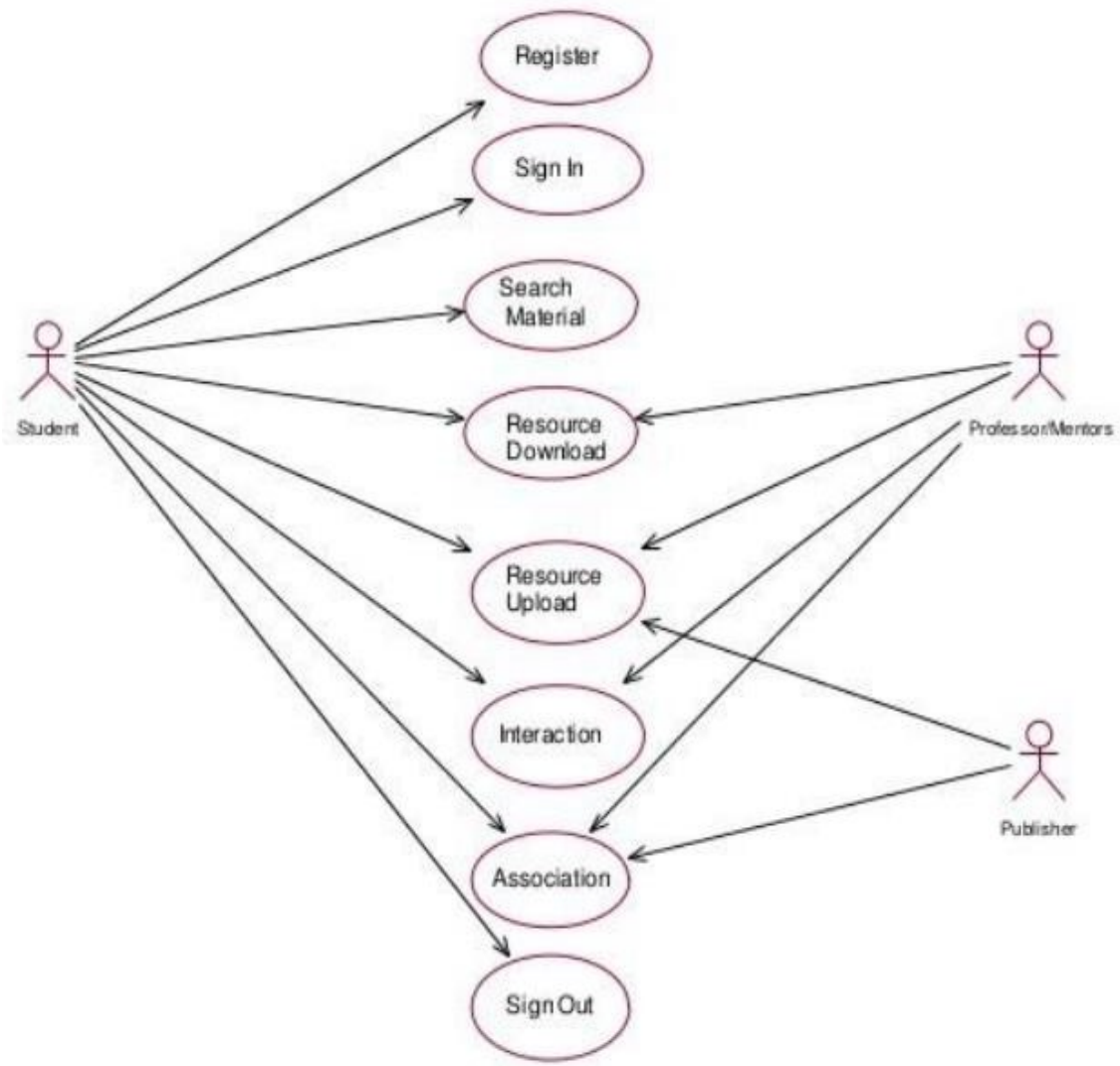

Figure5.1.1:UseCase

5.1.2 DATAFLOWDIAGRAM

Data flow diagram is the starting point of the design phase that functionally decomposes therequirements specification. A DFD consists of a series of bubbles joined by lines. The bubblesrepresent data transformation and the lines represent data flows in the system. A DFD describeswhat data flow rather than how they are processed, so it does not hardware, software and datastructure.

Adata-flowdiagram(DFD)isagraphicalrepresentationofthe"flow"ofdatathroughaDFDscanalsobeusedfortheprocessing(structureddesign).Adataflowdiagram(DFD)isasignificantmodelingtechniqueforanalyzingandconstructnginformationprocesses.DFDliterallymeansanillustration that explains the course or movement of information in a process. DFD illustrates thisflow of Information in a process based on the inputs and outputs. A DFD can be referred to as aProcess Model. The data flow diagram is a graphical description of a system's data and how toProcess transform the data is known as Data Flow Diagram (DFD). Unlike details flow chart,DFDs don't supply detail descriptions of modules that graphically describe a system's data andhow the data interact with the system. Data flow diagram number of symbols and the followingsymbols areof byDeMarco.

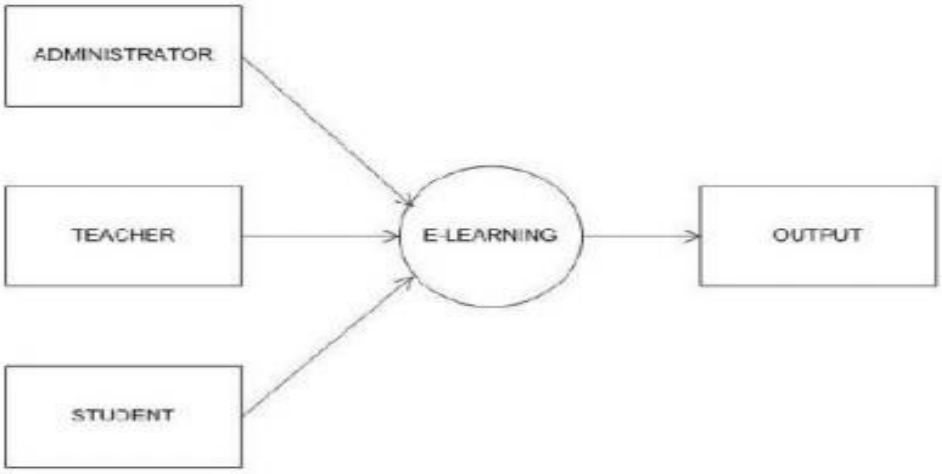

This shows the context level diagram of the system. The users of the system are administrator, teachers and students.

5.1.3 ERDIAGRAM

Entity Relationship Diagram: E-R Model is a popular high level conceptual data model. Thismodel and its variations are frequently used for the conceptual design of database application andmany database design tools employ its concept. A database that to an E-R diagram can berepresented by a collection of tables in the relational system. The mapping of E-R diagram to theentitiesare:

- Attributes
- Relations

  1. Many-to-many
  2. Many-to-one
  3. One-to-many
  4. One-to-one

- Weakentities
- Sub-typeandsuper-type

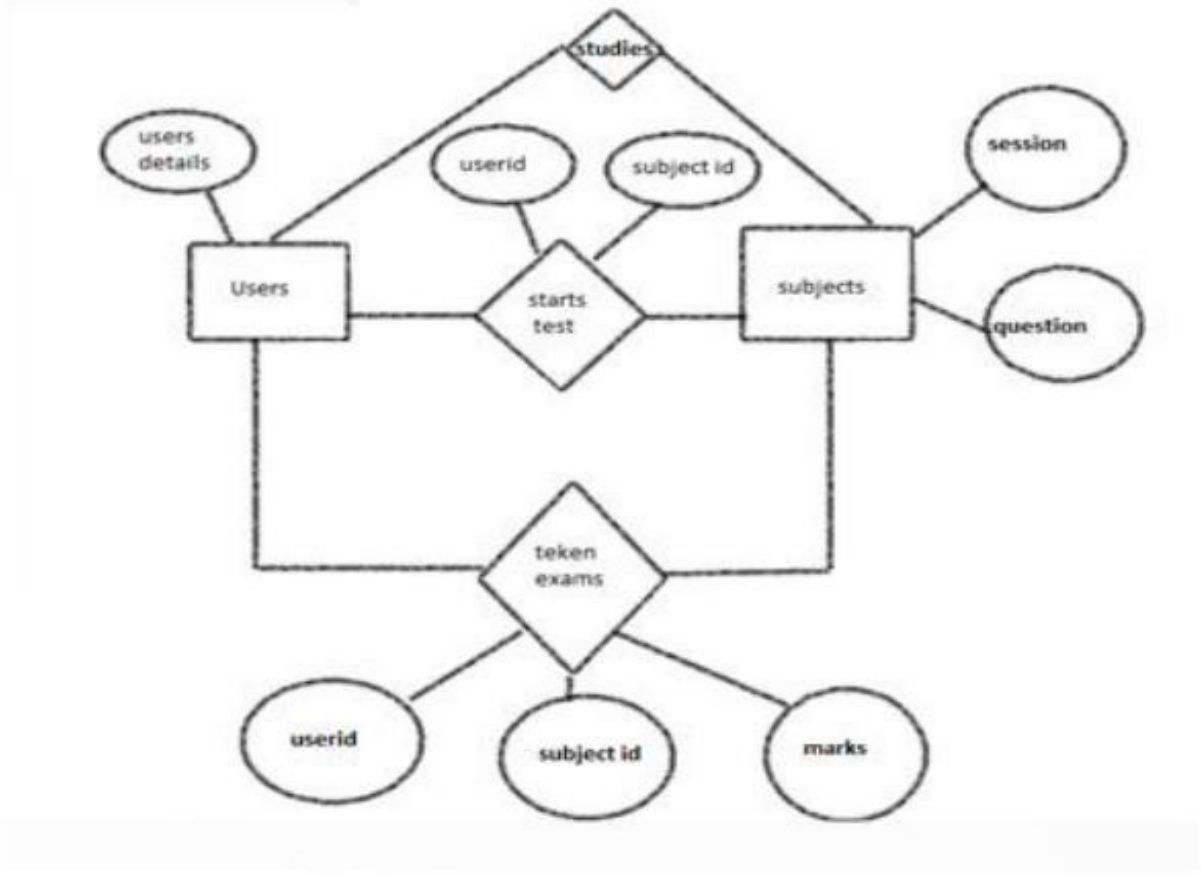

Figure5.1.3:ER Diagram

5.2 STRUCTURALDIAGRAMS

5.2.1 SEQUENCEDIAGRAM

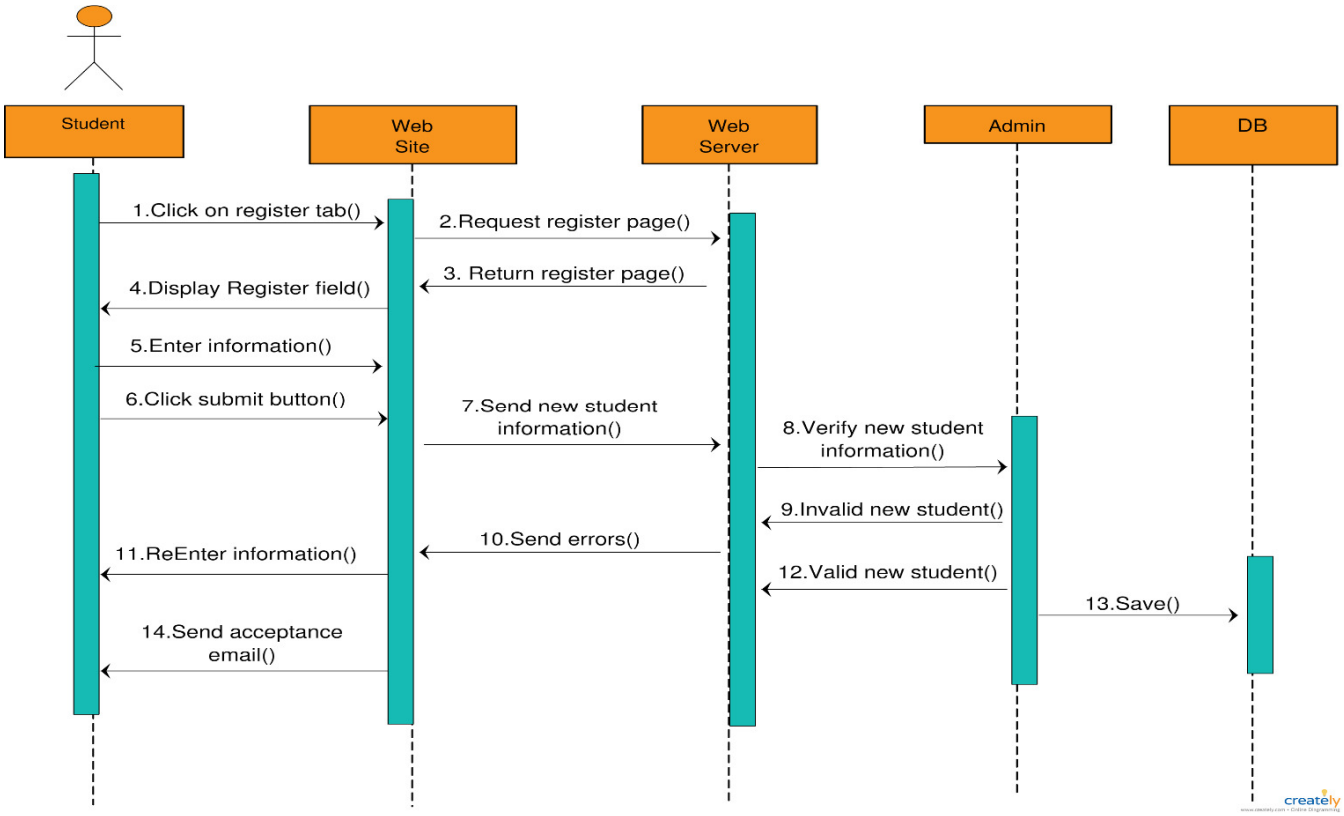

Figure5.2.1:ER Diagram

A sequence diagram simply depicts interaction between objects in a sequential order i.e. theorder in which these interactions take place. We can also use the terms event diagrams or eventscenarios to refer to a sequence diagram. Sequence diagrams describe how and in what order theobjects in a system function. A sequence diagram shows, as parallel vertical lines (*lifelines*),different processes or objects that live simultaneously, and, as horizontal arrows, the messagesexchangedbetweenthem,intheorderinwhichtheyoccur.Thisallowsthespecificationofsimpleruntimescenarios in a graphical manner.

Messages, written with horizontal arrows with the message name written above them, displayinteraction.Solid arrow heads represent synchronous calls, open arrow headsrepresentasynchronousmessages,anddashedlinesrepresentreply messages.[1]Ifacallersendsasynchronous message, it must wait until the message is done, such as invoking a subroutine. If acaller sends an asynchronous message, it can continue processing and doesn't have to wait for aresponse. Asynchronous calls are present in multithreaded applications, event-driven applicationsandin message-orientedmiddleware.Activationboxes,or method-callboxes,areopaquerectanglesdrawnontopoflifelinestorepresentthatprocessesarebeingperformedinresponsetothemessage.

CLASSDIAGRAM

A class diagram in the UML is a type of static structure diagram that describes the structure ofa system by showing the system's classes, their attributes, operations (or methods), and therelationshipsamong objects.

Theclassdiagramisthemainbuildingblockofobject-orientedmodeling.Itisusedforgeneralconceptual modelingof the structure of the application, and for detailed modeling translating themodelsintoprogrammingcode.Classdiagramscanalsobeusedfordata modeling.Theclassesina class diagram represent both the main elements, interactions in the application, and the classestobe programmed.

Inthediagram,classesarerepresentedwithboxesthatcontainthree compartments:

- Thetopcompartmentcontainsthenameoftheclass.Itisprintedinboldandcentered,andthefirstletter is capitalized.
- Themiddlecompartmentcontainstheattributesoftheclass.Theyareleft-alignedandthefirstletteris lowercase.
- Thebottomcompartmentcontainstheoperationstheclasscanexecute. Theyarealsoleft-alignedand the first letter is lowercase.

In the design of a system, a number of classes are identified and grouped together in a classdiagram that helps to determine the static relations between them. With detailed modeling, theclassesof theconceptual design areoften splitinto anumberof subclasses.

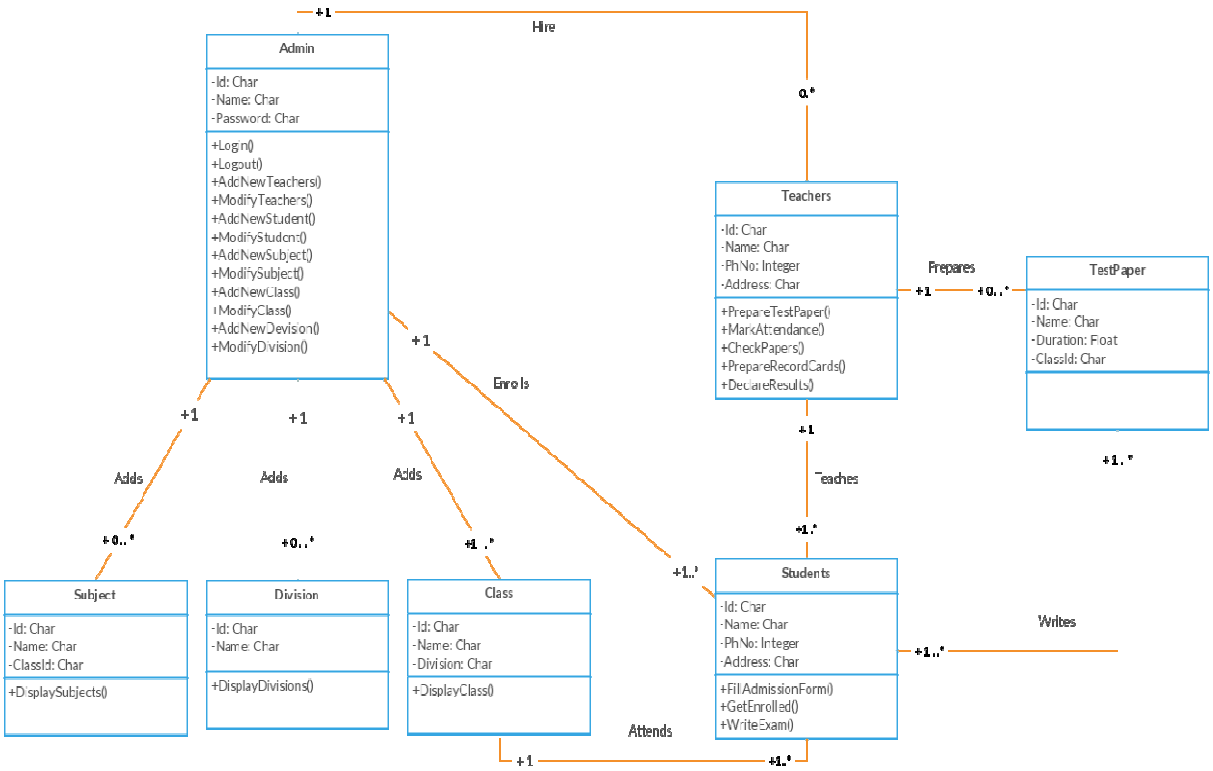

Figure5.2.2:Class Diagram

CHAPTER

6TECHNICALSPECIFICATIONS

6.1 ADVANTAGES

- Savestimes
- Savespaperwork
- Feasibilityoftime
- Userfriendlyandeasytouse
- Attendanceandfeedbackismadeeasy
- Moresecurity addedforgivingexams
- Generationandunderstandingofresultisefficientsandeasy
- Storingandresultevaluationiseasynow
- Lecturesandnotescanbeuploadedindifferenttypes like:audio,videoandetc.
- Norestriction forlanguage

6.2 LIMITATIONS

- InternetConnectionisrequired
- Forgettingallthefeaturesofproject youshouldbearegistereduser

6.3 APPLICATIONS

1. School

- E-Learning Management System with Online Exam Portal can be used in various schoolsforconductinglecturesandexamsineasyandcomfortablewayandtakingattendanceandfeedbackis also easy.

2. Colleges

- E-LearningManagementSystemwithOnlineExamPortalcanbeusedinvarious collegesforconducting lectures, uploading notes
- Andexamsineasyandcomfortablewayand takingattendanceandfeedbackisalsoeasy.

3. Coachingclasses

- E-Learning Management System with Online Exam Portal can be used in various tuitionclasses for conducting lecturesandexams ineasy andcomfortable way and takingattendanceand feedbackis also easy.

4. Competitiveexams

- E-Learning Management System with Online Exam Portal can be used for conductingvariouscompetitive exams onlinewith security.

CHAPTER7

FUTURESCOPEANDCONCLUSION

7.1 FUTURESCOPE

Inanutshell,itcanbesummarizedthatthefuturescopeoftheprojectcirclesaroundmaintaininginformation regarding:

- Developan androidapplicationforstudentsandparents.
- WecangivemoreadvancesoftwareforE-learningManagementSystemincludingmorefacilities
- Integratemultipleloadbalancers todistributetheloads ofthesystem.
- Createthemasterandslavedatabasestructuretoreducetheoverloadofthedatabasequeries.

Theabovementionedpointsaretheenhancementswhichcanbedonetoincreasetheapplicability and usage of this project. Here we can maintain the records of Assignment andStudent.Also,asitcanbeseenthatnow-a-daystheplayersareversatile,i.e.sothereisascopeforintroducingamethodtomaintaintheE-learningManagementSystem.Wehaveleftalltheoptionsopensothatifthereisanyotherfuturerequirementinthesystembytheuserfortheenhancementof the system then it is possible to implement them. In the last we would like to thanks all thepersonsinvolvedinthedevelopmentofthesystem directlyorindirectly.Wehopethattheprojectwillserveitspurposefor whichit is developthere by underliningsuccess ofprocess

7.2 CONCLUSION

Ourprojectisonlyahumbleventuretosatisfytheneedstomanagetheir projectwork.Severaluser friendly coding have also adopted. This package shall prove to be a powerful package insatisfyingalltherequirementsoftheschool,collegesandoveralleducationsystem .Theobjectiveof project is to provide a frame work that enables the manger to make reasonable estimates madewithin a limited time frame at the beginning of the project and should be updated regularly as theprojectprogresses. Attheend itis concluded thatwehavemadeeffort onfollowing points...

- Adescriptionofthebackgroundandcontextof theprojectanditsrelationtoworkalreadydoneinthearea.
- Madestatementofthe aims andobjectivesoftheproject.
- ThedescriptionofPurpose,Scope,andapplicability.
- WedescribetherequirementSpecificationsofthesystemandtheactionsthatc anbedoneonthesethings.
- Weunderstandtheproblemdomainandproduceamodelofthesystem,whichd escribesoperationsthat can beperformed on the system.
- Wedesigneduser interface andsecurity issuesrelated tosystem.

20. Automatic Hand Sanitizing Machine

College	LokamanyaTilakCollegeOfEngineering.
ProjectGuide	Mohd.Farhan
CollegeStudents	1) ShivamVirendrakumarShukla 2) KaushlendraNandkishorGupta
SchoolStudents	1) AtharvaKalambe 2) TanmayDhonde
School	NMMCSchoolNo.-31Koparkhairne

Abstract

TheAutomaticHandSanitizingMachinetheideaistoprovidethesantizer toeverypersononpublic place of doctor's office or in college school without touching the bottol. Why to servewithout touch now a days in 2020 or in coming days this situations means this COVID-19Epidemic in coming days the colleges and schools are going to open and there we need toinsurethesafetyof all thepeoples.

PlanningOfWork/Process

BlockDiagram

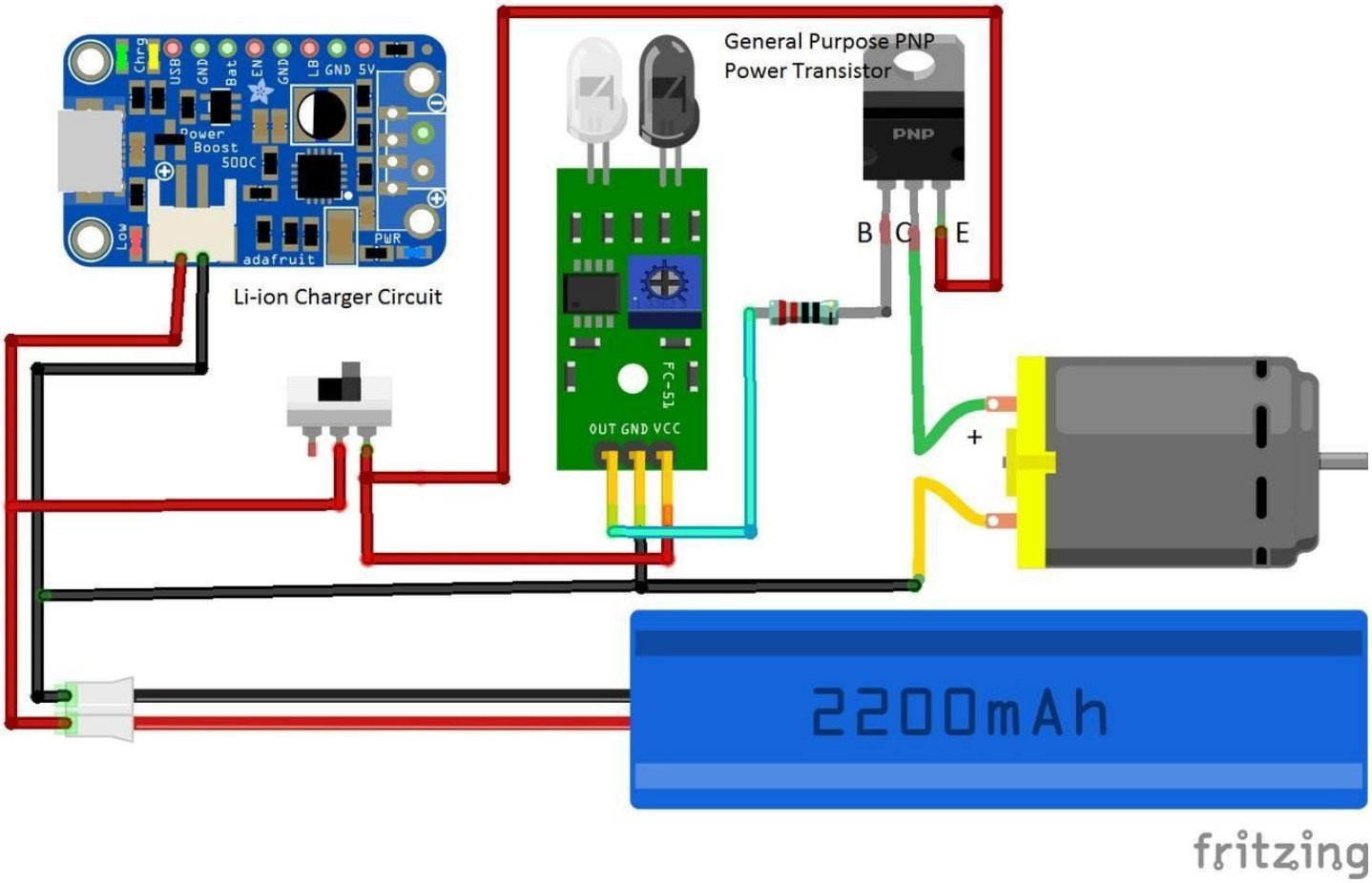

ComponentsRequired

IRSensor

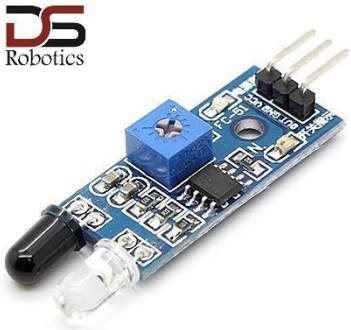

IR Sensor is stand for Infrared sensor consist of the two sensor inwhich the IR LED transmits the infrared light and another LED detectstheIRlight.

RelayModule

Therelaymoduleisusetotriggers thesubmersiblepump.

SubmersiblePump

ıbmersiblePumpwhichpumpstheliquidfrombottol.

CardBoard

CircuitDiagra

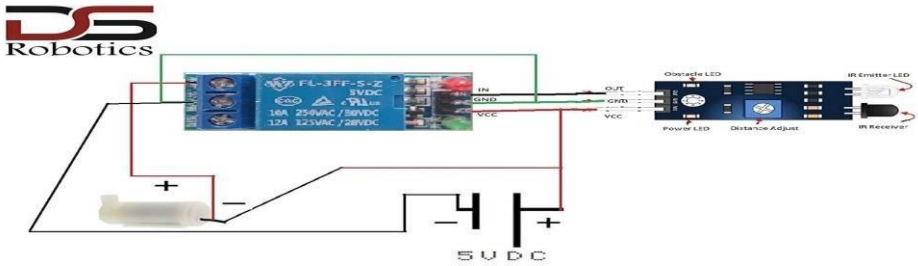

FinalM
achine

ComponentsCost

Components	Cost
	120
	80
	80
	20

	50
Robotics	20
Total	370+50=400

Advantages

- Personcansanitizetherehandwithouttouch.
- Lowcostcomponents.
- NocodingIsrequired.
- Lowpowersupplyisrequired.
- Itcanbebestbusinessideaforthisepidemic

Disadvantages

- PowerSupplyRequiresforoperation.

21. Disaster alertfor smartcity

COLLEGE	VIVA Instituteof Technology Shirgaon, Virar(East),Dist: Palghar-401305,Maharashtra
PROJECT GUIDE	Prof. MadhuraRanade
COLLEGE STUDENT	HarshadSawant,HrutikeshSawant
SCHOOL STUDENTS	RashiGhagare,BhanupreetaKhire
SCHOOL	Kai P.R. PatilUtkaesha Madhyamik Vidyalaya &JrCollege

ABSTRACT

Inthisworldeveryyearlotsof people have to lose their life, their homes due todisasterslikeFloods, Earthquakes, cyclones, etc. About 60% of the landmass is proneto earthquakes of various intensities; over 40 million hectares are prone to floods. Dueto the increasing population in cities There comes a problem like waste management,parking places for vehicles, women's safety, lots of people have to lose their life inAccidents, road crossing for a handicapped person, etc. The proposed city is smart andsafe enough to reduce such problems by giving alerts to people who are living in suchcities. This will save human life from natural disasters, it will make their style of livingbetter.Anditwillalsobesafeforwomenifanywomanwillbeinsomeproblemsothey will get immediate help from the nearby police station. For reducing cost and forenergy conservation we are implementing a smart city. Which will have smart streetlights,atrafficsignalcontrolsystemtopreventtrafficinurbancity,aagarbagemanagement system will inform the waste management department when the dustbin isfull so that the city will remain neat and clean, smart parking will provide space forpeople's cars so that no one will park their cars in the road.

PLANNING OFWORK/PROCESS

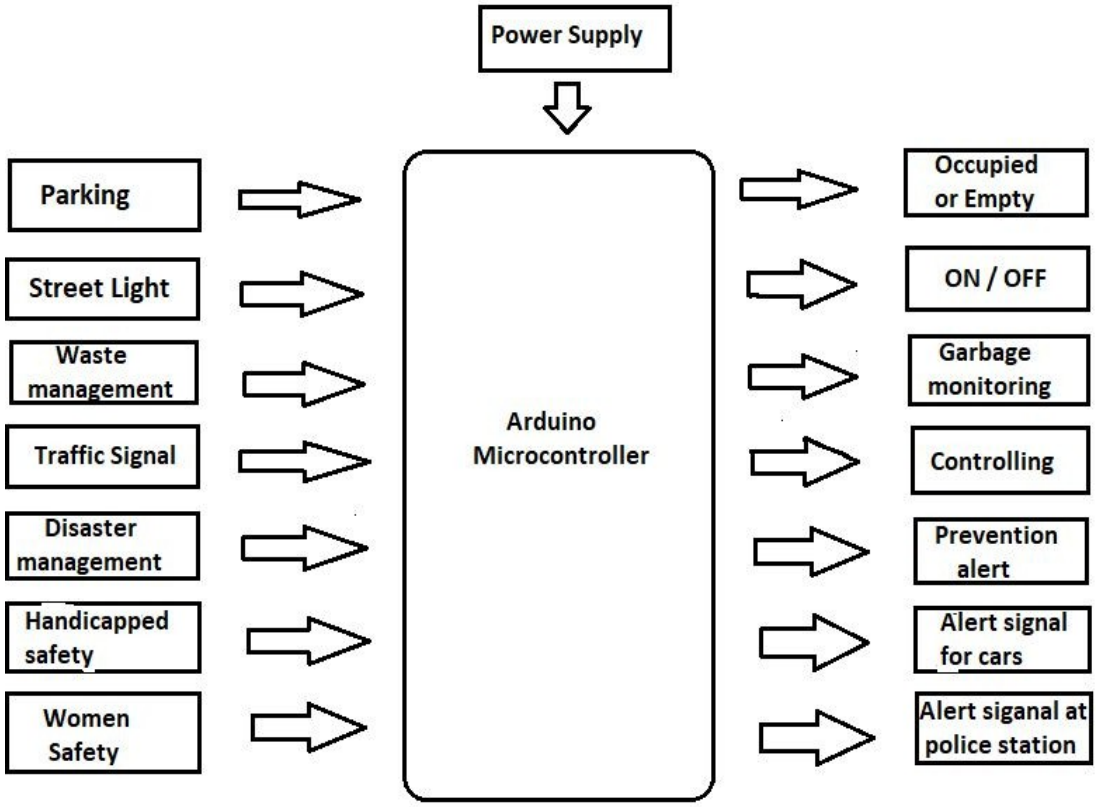

Fig. Block Diagram

METHOD:

i. Flood alert system:

Riverside cities should get quick alerts of floods so they can migrate to a safe place. Byusing the ultrasonic sensor that helps in detecting the increase in water level and LCDwill display an alerting signal for nearby villages. So with the help of these, they willimmediately leave their city and migrate to a safe location.

ii. Earthquake AlertSystem:

Thegoalofearthquakepredictionistogivewarningofpotentiallydamagingearth quakes early enough to allow appropriate response to the disaster, enabling peopleto minimize loss of life and property. By using the Accelerometer (ADXL335) sensorand LCD display. also, we can alsoalert people traveling outside the city.

iii. Women safetysystem:

Nowadays also there are some cities where women feel insecure while traveling outsidethe home and any other places. There are some people who create a dangerous situationfor them, they can't get any help immediately. Therefore in this system, we are using atouch sensor, after touching the sensor, they will get immediate help from the nearbypolice station. It will help in reducing rape cases in ourcountry.

iv. Road Crossingfor childrenand peoplewith disabilities:

In India, there is no such road crossing system for children and people with disabilitiesso that they can cross the road without any fear of accidents. children and handicap person shave to wait for some one who will help them to crossaroad.Wehaveimplemented an intelligent road crossing system in our project using the Touch sensorand LED so that peoplewith disabilities and children cancross the road safely.

v. Smart StreetLights:

Street Lights have become an essential part of our lives as they are an important sourceof light in the evening and night time. The main advantage of street lights is that theyincrease safety and prevent accidents and collisions. Nowadays most of the street lightsare always kept on even if there is no vehicle going on, it consumes a lot of energy. InthissafesmartcityusingtheIRsensorandLDRwillhelpincontrollingthelight.If

any vehicle is going on then it will glow a high-intensity light otherwise it will glowwith low intensity.

vi. Traffic SignalControl System:

Trafficlightcontrolsystemsarewidelyusedtomonitorandcontroltheflowofautomobiles through the junction of many roads in the city. They aim to realize thesmoothmotionofcarsontransportationroutes.SobyusingIRsensorsandLEDwecan reduce problems like traffic jams.

vii. Waste Managementsystem:

The problem of waste management has arisen due to the increasing population in urbanareas. In some cities, there is no such place to dump the garbage. If there is a place or atrash can, it will be easier for those who come to pick up trash. In this proposed city, wehave waste management monitoring which is made by using the Ultrasonic sensor. Thiswill allow the garbage truck to get information about the dustbin level. When the binsare full, they will collect it. This will keep our cityneat and clean.

viii. Smart ParkingSystem:

Smart parking can reduce traffic by making it easier to locate empty parking spaces,thuslowering the risk of distracted driving. Through the use of sensors that detect whetherthespaceisemptyoroccupiedandLEDlightswillindicatethat.Smartparking technology can help drivers locate empty and occupied slots. Rather than scanfor empty spaces, drivers can easily assess availability through red and green lights. Therefore we have implemented a parking system using a servo motor and IR sensors, which will have a lot-specific parking space.

PHOTOGRAPHOFSTUDENTSLEARNING

BENEFITS:

- A disaster alertsystem helps tosave people’slife, by alertingthem.
- Women’s safety systemswill helpwomen if theyare indanger.
- The road crossing system is Safe for children and people with disabilitieswhen they are crossing a road.
- It will savepeople’s life fromfires.
- It helps inwaste management.
- A smart citywill save energyand reduce itscost.
- This city willmake people livesafe andhealthy.

SUMMARY:

- Riverside cities shouldget quick alertsof floods sothey canmigrate to asafe place.

- Wheneverpeopleareapart from home at that time suddenly an earthquake willhappen, so at that time citizens will get a sudden alert and they can migrate to a safeplace.

- When women are in dangerous conditions, they will get immediate help from thenearby police station. It will help in reducingrape cases in our country.

- Road crossing for senior citizens, handicapped persons, and children will becomeeasier and safe.

- If any vehicle is going on the street light will glow a high-intensity light otherwise itwill glow with low intensity.

- Trafficmanagementsystemsaimtorealizethesmoothmotionofcarsintrans portation routes, so we canreduce the major problem oftraffic blockage.

- Whenever the garbage level is full then the garbage truck will get information aboutthedustbinlevel,theywillcomeandcollectitinstantly.Thiswillkeepourcit yneatand clean.

- Smart parking technology can help drivers to locate empty and occupied slots. Ratherthan scan for empty spaces, drivers can easily assess availability through red and greenlights.

COST:

The totalcostofthis projectisApprox.₹3500/-

22. APPTOIMPROVEMENTALHEALTH

COLLEGE	SIES GRADUATE SCHOOL OF TECHNOLOGY
GUIDE	Prof. MasoodaModak
COLLEGES TUDENTS	ZainabBubere, C R AbubakkarWasim
SCHOOL STUDENTS	PoojaPanchal, MitaliPanchal
SCHOOL	Mulund Camp English School

ABSTRACT

Mental health is one of the significant aspects of an individual's life. Good mental health of thepopulation of a country helps in its socio-economic development. The COVID-19 pandemic hastaken a toll on the mental health of a lot of people. Social awareness regarding the need to treatdepression is quite less. People are hesitant to open up about their problems.

App to improve mental health will provide the opportunity to people who are suffering fromdepression to contact the appropriate counselors and share their problems with them. The appwill remind the user to follow the schedule provided by the counselor and will keep track of hisprogress and send the progress report to the respective counselor which will help in improvingthe mental health of the user.

PLANNINGOFWORK/PROCESS METHOD

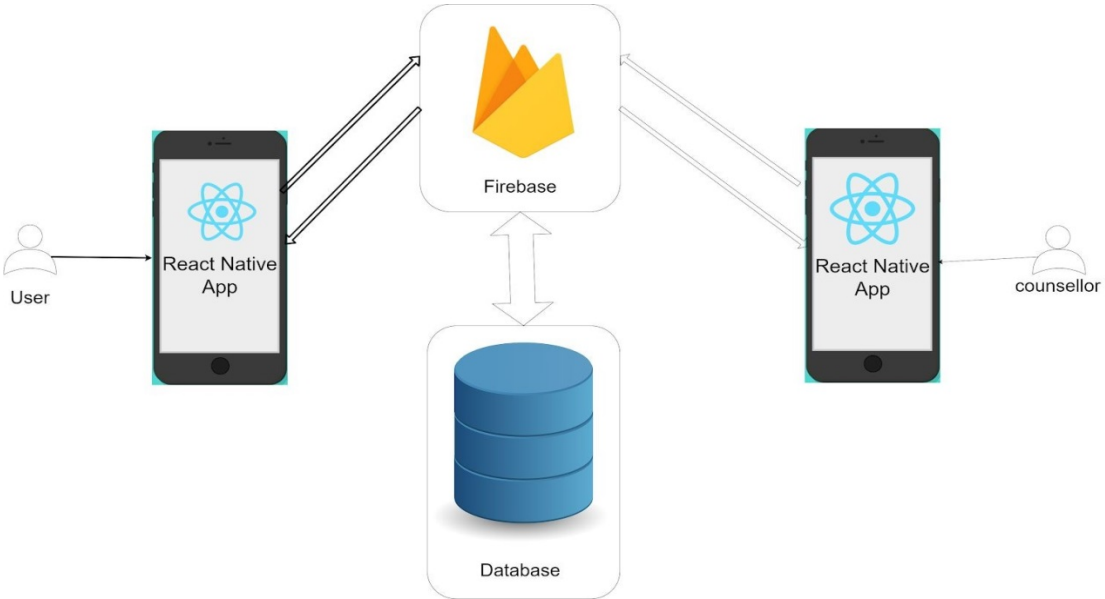

The app will have two different login methods one as a user and the other as counsellor. The usershavetologinwithbasicinformationsuchastheiremailaddressandmobilenumber.Thecounselor will have to provide some more specific info such as their degree, years of experiencethey have and their field of expertise. Once signed up a new user will be created in the firestoredatabase as a user or counsellor accordingly. Each user document will have their info associatedwith them. The application allows us to connect with different counselors through chat. The chatwill be stored in the firestore database. So that if the counselor or the user switches their devicethey won't lose their data. Each user will have a task collection to them which holds the details ofthe task assigned to them by the counsellor with a boolean value to mark its completion. The user collection will alsohavetherecordoftheresulttothequestionnaireifithasbeentakenbytheuser.Thiswillbeusedforfutureevaluationoftheirmentalstatus.Thecounselorontheotherhand will have a list of users assigned to them. They will have access to some details such as thestatus of the task of the users who have consulted them. This is so that they can monitor theirbehaviour and suggest changes if needed.

PHOTOGRAPHOFSTUDENTSLEARNING

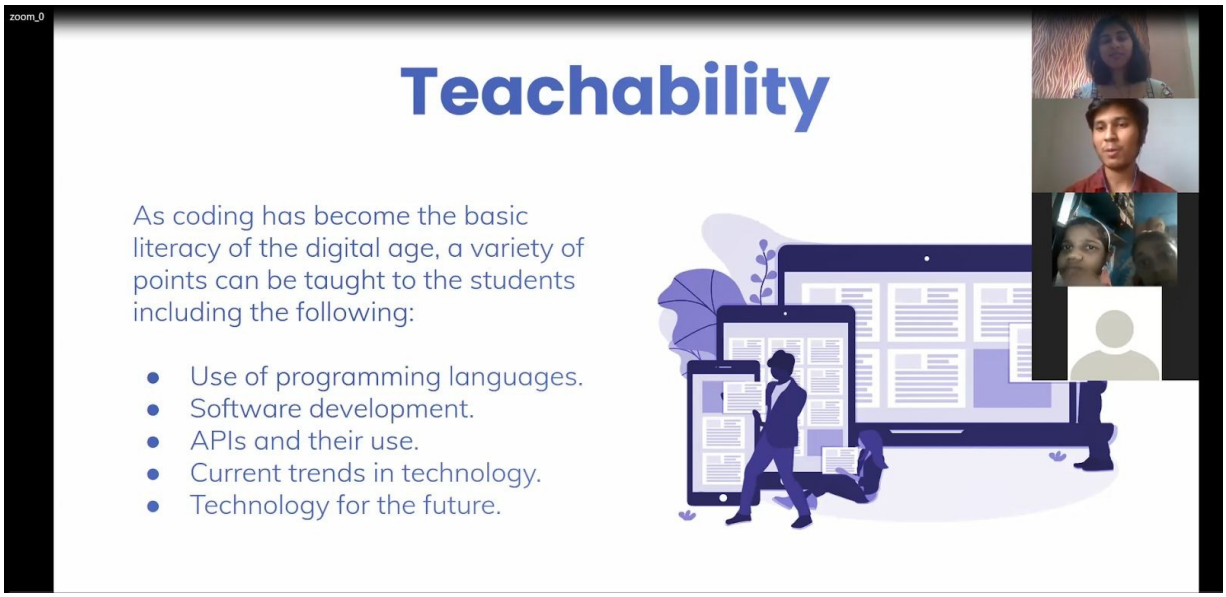

BENEFITS

- It will help in the overall development of the mental health of the society.
- It will help the people suffering from depression, different mental issues and dilemmas tocope up with it and adopt a healthy lifestyle.
- It will also help them to become productive.
- It will result in the socio-economic development of the society.
- It will help in the development of a happier and healthier young generation.

SUMMARY

Depression constitutes one of the largest disease burdens throughout the world. Suicide is thethird-leading cause of death for young people ages 15 to 24. Only 30 percent of depressed teensare being treated for it.
The app will enable people suffering from depression and other mental issues, facing indecisionproblems and in need of guidance to discuss their problems with psychiatrists and counsellors bymaintaining anonymity.. It will help people of all ages from all over the world fight depression
and improve their mental health by adopting a healthy lifestyle.

COST

The cost for publishing the app on the Play Store will be around Rs. 3000.

23. Topic: LeARnAnARBasedLearningApplication

College	PuneVidyarthiGriha'sCollegeofEngineering&S.S.DhamankarInstituteofManagement,Nashik
ProjectMembers	Mr.VaibhavBedarkar&Miss.NikitaShivalkar
School	PuneVidyarthiGriha'sDr.KakasahebDeodharEnglishSchool, Nashik
Students	Miss.SrushtiNirgude
ProjectGuide	Prof.M.T.Jagtap

1) **Abstract**

InIndia,24.79Lakhstudentswereenrolledinprimaryeducationintheyear 2018-19.Itgivesusanideaaboutthehumongouspoolofstudentsandneedforeducationalreforms.The current education system still makes use of traditional learning tools like boards and Plasticmodels in teaching.The I.C.T based toolsrequire high infrastructure costand also results inmuggingtheconceptsandlackconcept-basedlearningandvisualizationamongstudents.Thesetoolsalsobringboredomandlackofinterestamongstudents.Thesolutionwearetryingtoproposemakesuseof AugmentedReality,whichcouldbethenextcosteffectivemodeofeducation andpromisestoconverteducationintoedutainment.

OurapplicationisbasedontheARCoreSDKwhichallowsustocreateanimmersiveAR experience on the Android Device.It is based on SLAM (Simultaneous Localization andMapping) techniques which studies the relative positionwithrespecttothepresentenvironment.ItmakesuseofFeaturePointstocompute the change in location. It alsomakesuseofAugmentedImages, a featurethat enablesus tobuildARappsthatrespondtoaspecificimageandtriggersARExperienceuponscanningtheobject(atextbookimage).

2) Architecture

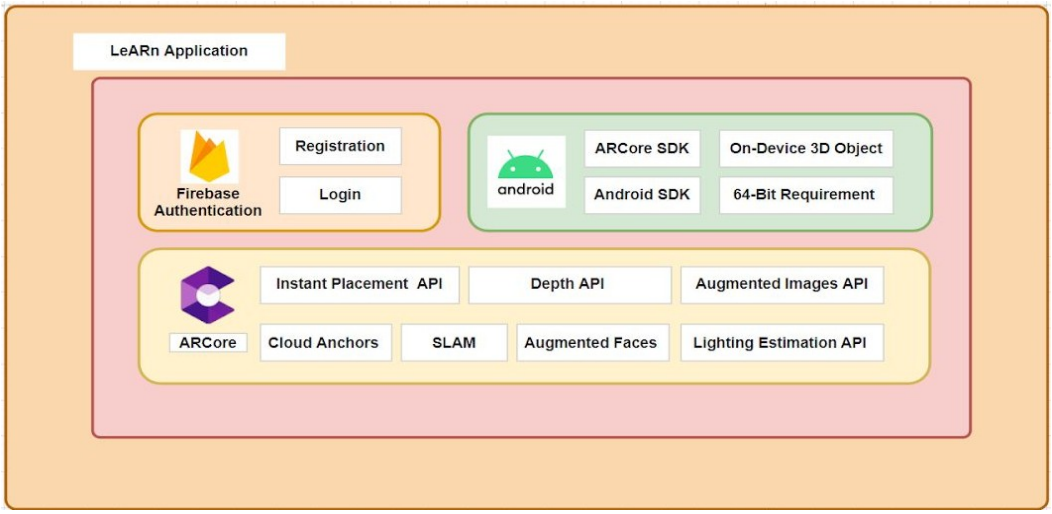

Fig.:ArchitectureofLeARn

3) Working

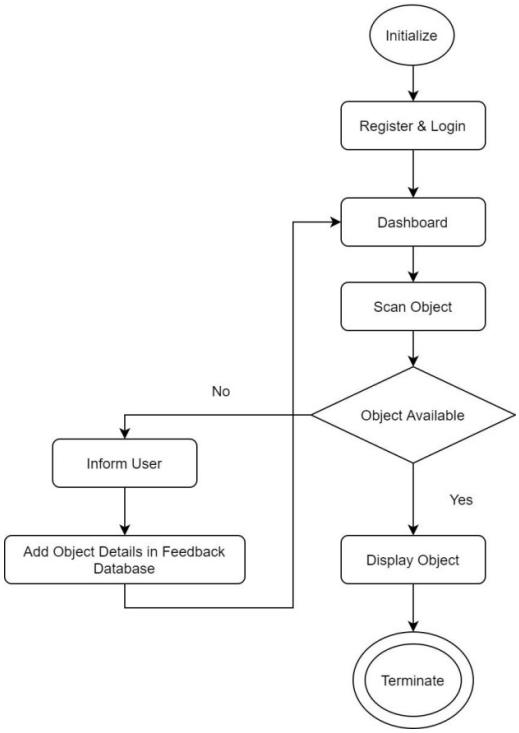

Fig.:WorkingofLeARn

1. UserLoginandRegistration:
Itallowstheusertocreatehis/heraccount.IttakesName,Email,Password,Ageandclassasaparameter and account is created. Admin can manage the account using FirebaseAuthentication.
2. JoiningofGroup:
Basedontheagegrouptheuserisgivenoptionstochoosethegrouphewantstojoin.Thisgroupactsasavirtualclassroom.ItalsocontainsacollectionofalltheMarkersandARObjects.
3. Gallery:
ItcontainsacollectionofalltheARObjectandlabexperiments.
4. ScanningofMarker:
Itallowstheusertoscantheobjectanddetectthesurfacebasedon SLAMbasedmappingtechniques.
5. Display:
ObjectGenerationBasedontheimagescannediftheobjectisavailablethecorrespondingARobjectisgenerated.
6. Feedback:
IftheparticularARObjectisnotavailable,theuserisgiventhefacilitytosuggestthedevelopertoaddtheobject.

4) Advantages

- ➔ Augmentedrealitycanbeusedbyanyoneincludingmentaly,physic allyandspeciallyabledpeople.
- ➔ Augmentedrealityblursthelinebetweenvirtualandrealworldthusitsu sageisincreasinginrealtimeapplications.
- ➔ Augmentedrealitypossessesahighlyinteractivenature.
- ➔ Augmentedrealityenablesinfrastructurecost-cuttingandthusthissavedfundscouldbeusedsomewhereelse.

5) Limitations

- ➔ WehaveexpectedDeviceswithARMX64-Bitprocessors.
- ➔ ThedeviceshouldhavesupportedOdometrySensorsforSLAMtoworkSm oothly.
- ➔ ThedeviceshouldsupportARCoreSDKandGoogleARservices.

6) Conclusion

The need to create affordable learning applications with next generation technology like AR hascreatedanimmenseopportunityfortheeducationsector to modernize its infrastructure andharnessthepoweroftechnology.Thisimprovementwillhelp the students in visualizing theconceptsmoreeffectivelybyharnessingthepowerof technology. For colleges and universitiesARwillcreateimmense opportunities - from student recruitment to the real learning processes.AR will require professional skills for content generation, full immersion, interaction, programmingandimplementationwhichwillalsoincreasetheemployment opportunity.

7) Cost

Sr.No	Stage	Cost
1.	DevelopmentCost (Costperhour*totalhours=₹800*40)	₹ 32,000/-
2.	HostingandServices(Firebaseasof31/12/2020)	₹~6000/-
TotalCost(in₹)		₹38,000/-

24.IoT Advanced Home Automation

Name of the College	LokmanyaTilak College of Engineering
Name of the Guider	Mohd. Farhan
College Students Name	Souma Mondal&AkashShirke
School Students Name	Radni and Varad
Name of School	Adarsh Vidyalaya

☐ Abstract

In recent years, the advancements in Information and Communication Technology (ICT) are mainly focused on the Internet of Things (IoT). In a real-world scenario, IoT based services improve the domestic environment and are used in various applications. Home automation based IoT is versatile and popular applications. In home automation, all home appliances are networked together and able to operate without human involvement. Home automation gives a significant change in humans life which gives smart operating of home appliances. This motivated us to develop a new solution which controls some home appliances like light, fan, doors, energy consumption, and level of the Gas cylinder using various sensors like LM35, IR sensors, LDR module, Node MCU ESP8266, and Arduino UNO. The proposed solution uses the sensor and detects the presence or absence of a human object in the housework accordingly. Our solution also provides information about the energy consumed by the house owner regularly in the form of message. Also, it checks, the level of gas in the gas cylinder if it reaches lesser than the threshold, it automatically books the gas and sends a reference number as a message to the house owner. The proposed solution is deployed and tested for various conditions.ThisIoT project also focuses on building a smart wireless home security system which sends alerts to the owner by using Internet in case of any trespass and raises an alarm optionally. Besides, the same can also be utilized for home automation by making use of the same set of sensors. The leverage obtained by prefering this system over the similar kinds of existing systems is that the alerts and the status sent by the nodemcu 8266 managed system can be received by the user on his phone from any distance. Finally, the working model of our proposed solution is developed as a prototype andexplained.

☐ Planning of Work /Process

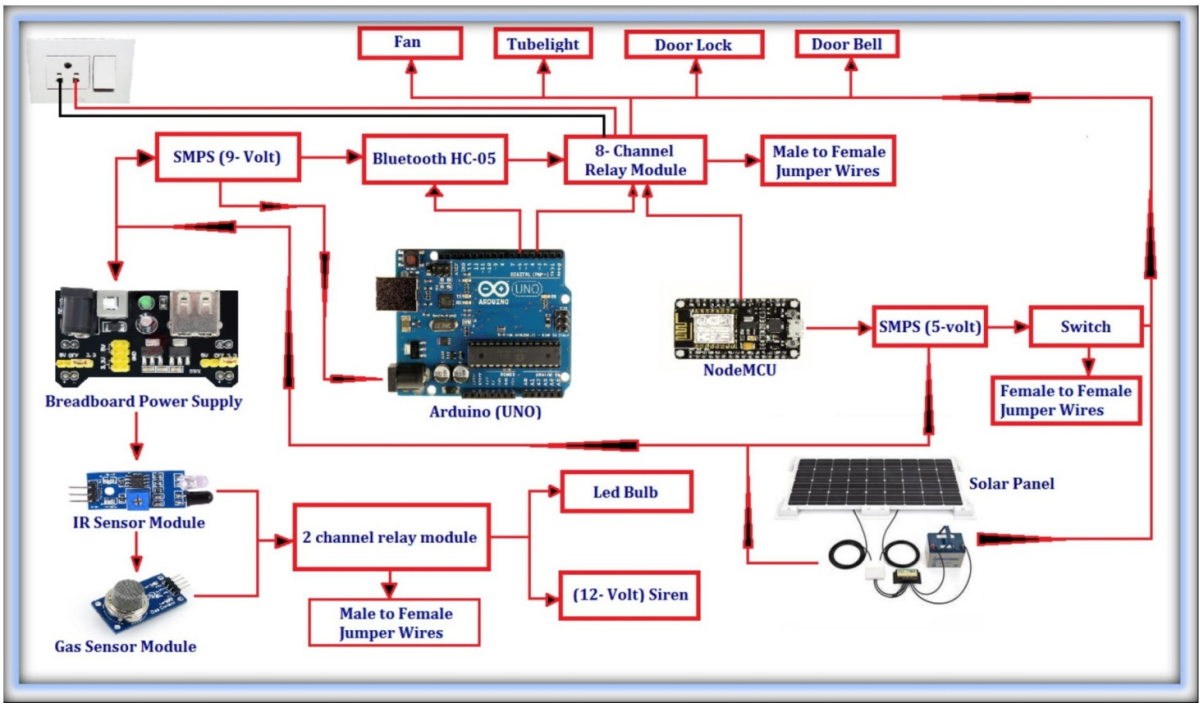

☐ Method

In our project we are trying to make an energy efficient advance secure home automation by using all possible sensors such as
ir or pir sensor for motion detection, gas sensor to monitor the lekage with alert message by siren, switch mode power supply to give possible power to dc components such as relay, arduino, nodemcu, breadboard power supply, dc siren, dc locker and also temperature sensor to monitor the room temperature. To make it more secure we are using iot door lock to give remote access including voice recognition mode and also our project is compatible with auto mode, switch mode, bluetooth mode. To make it energy efficient we are trying to save energy by using solar panels to recharge the battery for power backup providing only to important appliances in emergency. To save power we are also using irsesnors to automate the light. All the data can be monitored by using android application so user can keep an eye on the applications remotely.

☐ Photograph of StudentsLearning

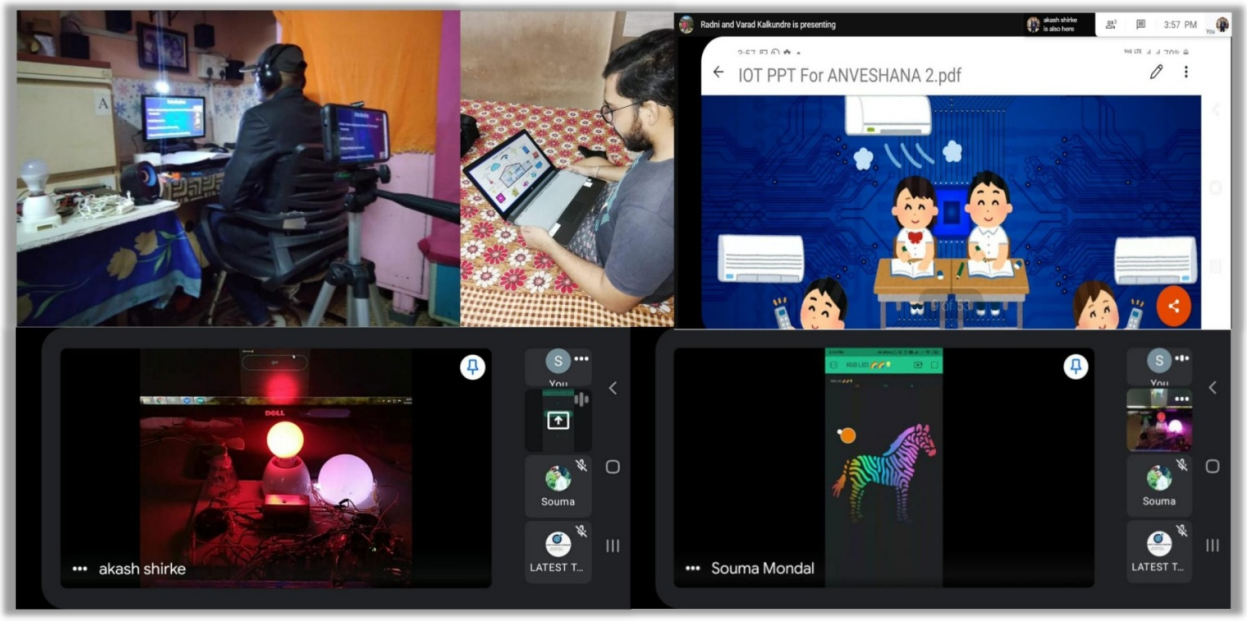

☐ Benefits

1. IoT gives you the inpedence for remote access to every possible devices just with onetouch
2. Its energy efficient as using dc sensor can limit your energy also by automating it we will only need the appliances as per our necessity no wastage ofenergy
3. We tried to make it advance using different modes like auto, voice, Bluetooth andwifi
4. Secured enough by continues monitoring thehouse
5. Easy compatible with any androiddevices

☐ Summary

Due you know how much we waste energy just by forgetting to off theappliances?

Imaging controling your home remotely with just a touch of your android devices
We are already moving towards digital world.
During this lockdown we started knowing the importance of social distance by giving remote access in every possible sector so as the IoT

☐ COST

The total cost of this project is rupees 6500/-

"One Touch Saves Energy"

25. SMART LOCK

PRINCIPLE

The main purpose of us doing this as a project is that, use of convention padlocking system is being older and needs drastic change in it operation by optimizing its conventional mechanical system and conversion into the new modified system by use of modern MECHATRONICS concept.

The project comprises both mechanical and electronic systems used to enhance the operation of the conventional padlocks and converting them into SMARTLOCK.

Application of this mechatronic concept make a drastic advancement in the operation of the conventional padlock system making is more safer, easy to operate, and more user-friendly.

HARDWARE USED

The hardware of project contains following components:

- Arduino Nano
- Fpc 1020A Finger PrintSensor
- Tip122
- Solenoid5v
- Battery3.7v
- Battery boostercircuit

ARDUINO NANO

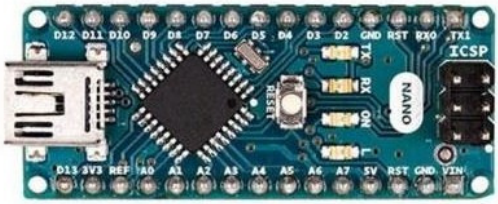

Arduino Nano

TheArduinoNano isa small, complete, and breadboard-friendly board based on the ATmega328 (ArduinoNano 3.x). It has more or less the same functionality of the ArduinoDuemilanove, but in a different package. It lacks only a DC powerjack, and works with a Mini-B USB cable instead of a standardone..

ARDUINO NANO

- Arduino Nano is a small, compatible, flexible and breadboard friendly Microcontroller board, developed by Arduino.cc in Italy, based on ATmega328p (Arduino Nano V3.x) / Atmega168 (Arduino NanoV3.x).
- It comes with exactly the same functionality as in Arduino UNO but quite in smallsize.
- It comes with an operating voltage of 5V, however, the input voltage can vary from 7 to12V.
- Arduino Nano Pin out contains 14 digital pins, 8 analog Pins, 2 Reset Pins & 6 PowerPins.
- Each of these Digital & Analog Pins are assigned with multiple functions but their main function is to be configured as input oroutput.
- They are acted as input pins when they are interfaced with sensors, but if you are driving some load then use them asoutput.
- Functions like pin Mode () and digital Write() are used to control the operations of digital pins while analog Read() is used to control analogpins.
- The analog pins come with a total resolution of 10bits which measure the value from zero to5V.
- Arduino Nano comes with a crystal oscillator of frequency 16 MHz It is used to produce a clock of precise frequency using constantvoltage.
- There is one limitation using Arduino Nano i.e. it doesn’t come with DC power jack, means you can not supply external power source through abattery.
- This board doesn’t use standard USB for connection with a computer, instead, it comes with Mini USB support.
- Tiny size and breadboard friendly nature make this device an ideal choice for most of the applications where a size of the electronic components are of greatconcern.

SOLENOID 5v

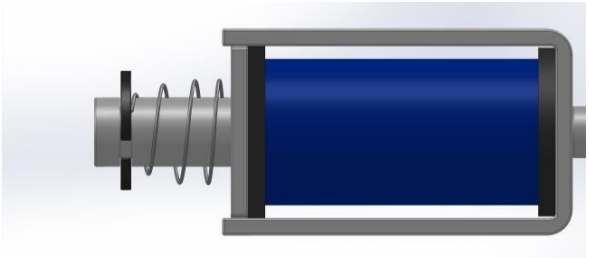

Solenoids are a great way to induce linear motion for pushing, pulling or controlling switches and levers. This smaller solenoid is designed to work directly with 5V which makes it a great match for embedded projects. It has a throw of about 4.5mm and 2 M2 mounting holes on the body.

FPC1020A

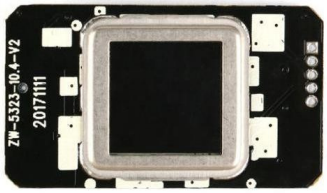

It is based on capacitive sensor technology. It delivers best in class image quality with 256 gray scale values in every single programable pixel. No matter dry, wet or dirty finger, it can read with its 3D pixel sensing technology. The control board is based on an ARM® Cortex®-M processor, it has a pre- burned program inside for processing the UART commands. Through this board, we can directly drive the fingerprint sensor via serial port.

Specifications

- Resolutions: 508DPI
- Fingerprint store capacity: 100 fingerprints
- Verification time: < 0.45sec
- Identification time: < 0.45sec
- False accept rate (FAR): <0.0001%
- False reject rate (FRR): <0.01%
- Interface: Serial UART, 19200 bps (default)
- Baud rate: 9600, 19200, 38400, 57600, 115200bps
- Working current: <50mA
- Standby current: <10μA
- Supply voltage: DC5V
- Digital I/O voltage: 2.8V ~ 5VDC
- Operating temperature: - 20℃ ~60℃
- Operating humidity: 20% ~80%

PIN CONFIGURATION

PIN DEFINATION

NAME	I/O	DESCRIPTION
V-TOUCH	POWER	Power for finger detected funtion,5V or 3.3V
TOUCH	OUTPUT	Output high (3.3V) when finger detected,otherwise output low
VCC	POWER	5V power input
UART_TX	OUTPUT	Transmitter of TTL serial
UART_RX	INPUT	Receiver of TTL serial
GND	POWER	Power GND

- How optical scanning does takesplace?

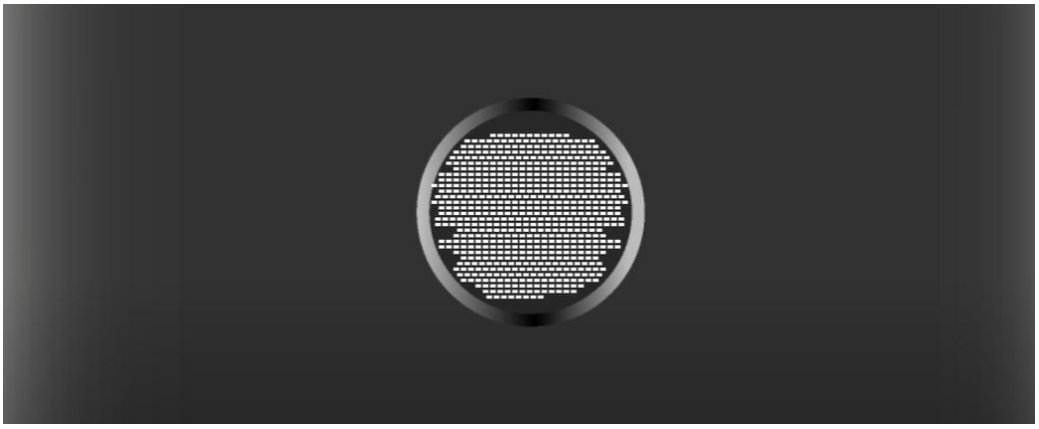

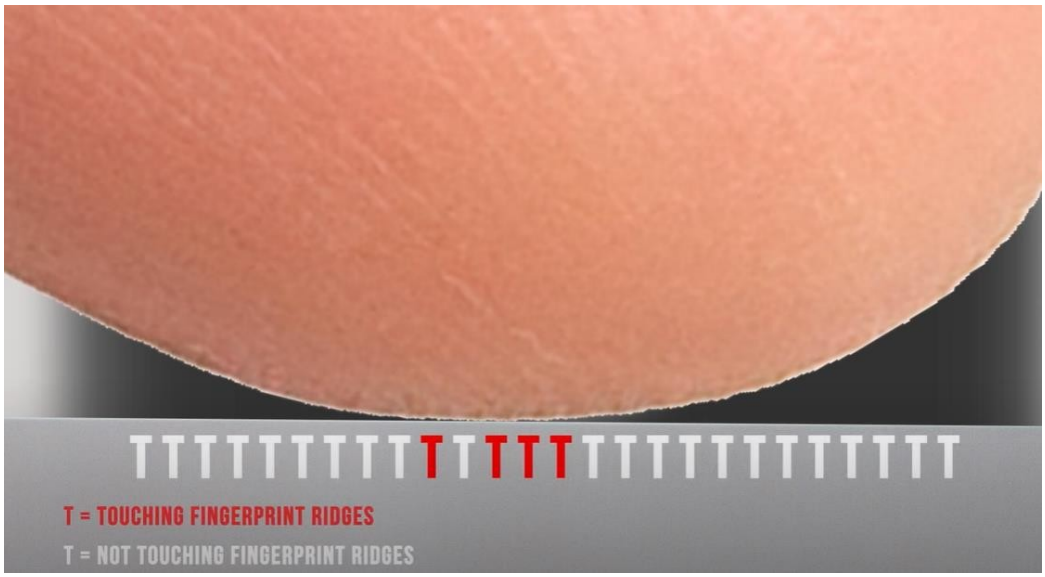

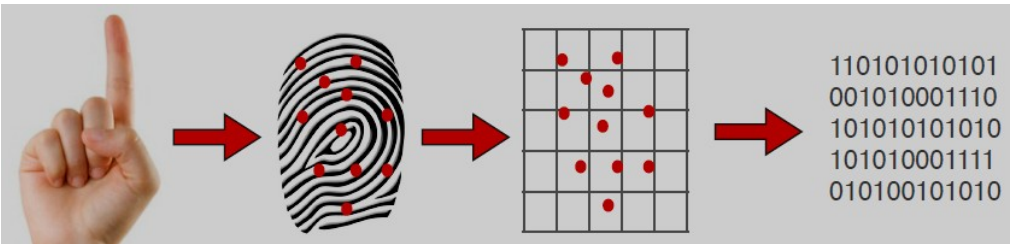

Optical as its name comprises the optical sensor has a scanner type of camer which scans the fingerprint of the consumer and stores it into the aurdino software .Which further uses it for further operations.

CONNECTIONS

There are only four pins that need to be hooked up in order to start using this sensor in a project. One for VCC, one for GND, and two data lines.

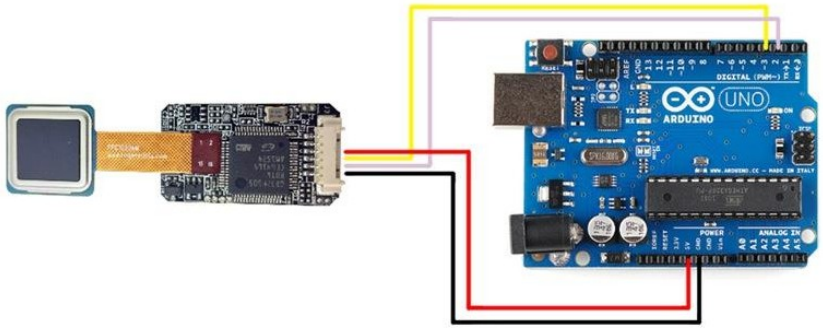

- VCC → 5V
- UART_RX → Digital2
- UART_TX → Digital3
- GND →GND

Connecting with Arduino NANO

The circuit diagram below shows the fingerprint scanner module connected to an Arduino Nano.

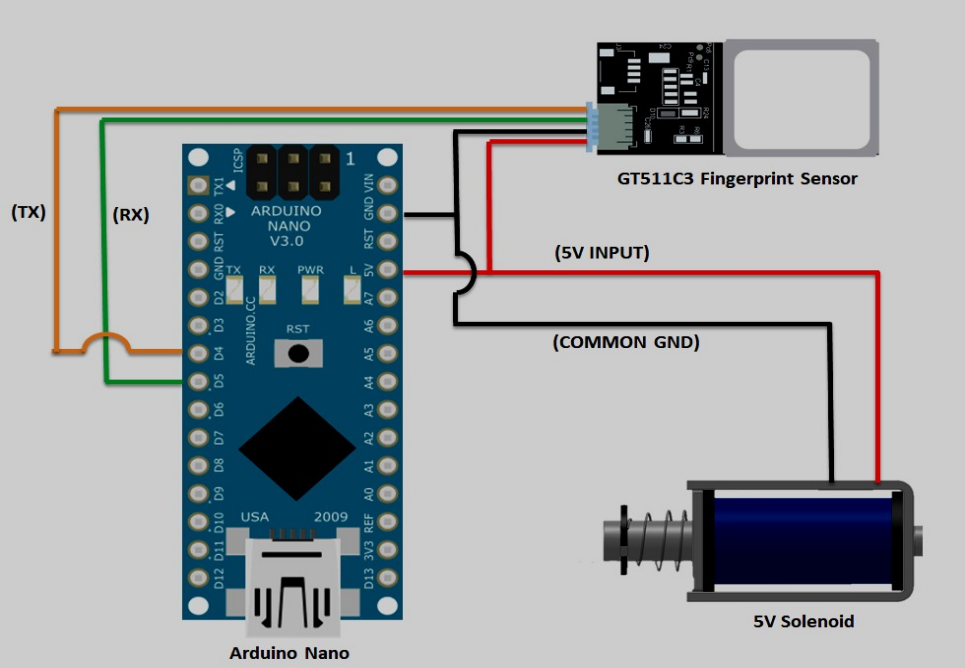

The FPS (Finger Print Scanner) has a back light led that can be powered on or off.

A sample code for blinking the FPS on given time Intel

```
#include "FPS_GT511C3.h"
#include "SoftwareSerial.h"

FPS_GT511C3 fps(5, 4);
void setup
Serial.begin(9600); //default baud rate fps.UseSerialDebug = true; // so message can
be displayed on serial com.
 fps.Open();
}

void loop()
{
 fps.SetLED(true);      // FPS Blink LED Test
delay(1000);
fps.SetLED(false);
 delay(1000);
}
```

PRINCIPLE OF WORKING

Main program run (Wellthought2.0)

"Fingerprint scanning+ Program Run= Execution of Task(locking/unlocking)"

The project is quite simple in operation , When the one complete cycle of the project loop is covered the lock is in the locked condition.

When the fingerprint is placed over the Optical scanner while the light of the scanner is turned of the scanner scans the fingerprint of the finger placed over the screen.

After a set delay time it will crosscheck the fingerprint recorded with the saved fingerprint. The program (Wellthought) will run as mentioned above. The program will be executed.

If the fingerprint matches with the saved fingerprint then the aurdino will actuate the solenoid.

The solenoid will actuate and the lock will be opened. The delay time for lock to stay open is 5 seconds. After the solenoid will actuate to its original position.

PROGRAMMING OF ARUDINO

Main program run (Wellthought2.0)

Mounting of components

The approx image of the final product is displayed below.

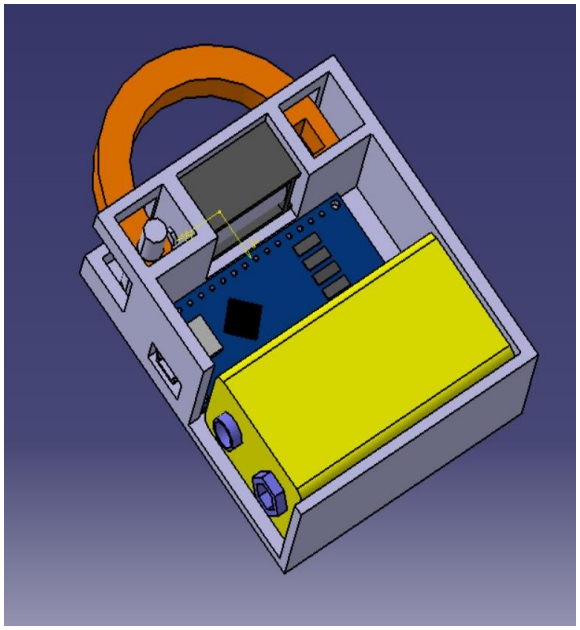

The entire circuitry is place into a compact custom case made using 3D Printing The design has been developed using CATIA V5R16 CAD software and processed using CURA 3D slicing software.

For manufacturing of the components the FDM (Fused deposition Molding) Is used.

As FDM's are most efficient and cost effective method to manufacture 3D printed component.

COST ANALYSIS

Sr No.	Content	Cost Rs.
1	ARUDINO NANO	250/-
2	GT511C3 FINGER PRINT SENSOR	800/-
3	SOLENOID 5V	500/-
4	BATTERY 9V	100/-
5	MISCALLENEIOS	200/-
TOTAL		1850

CATIA DRAWINGS

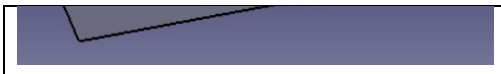

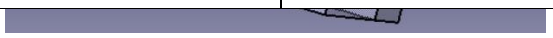

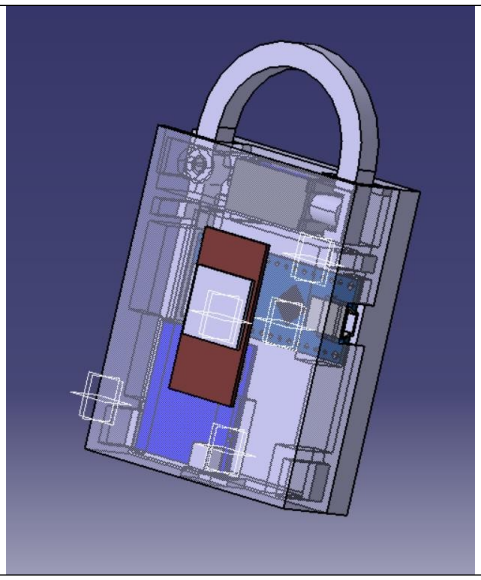

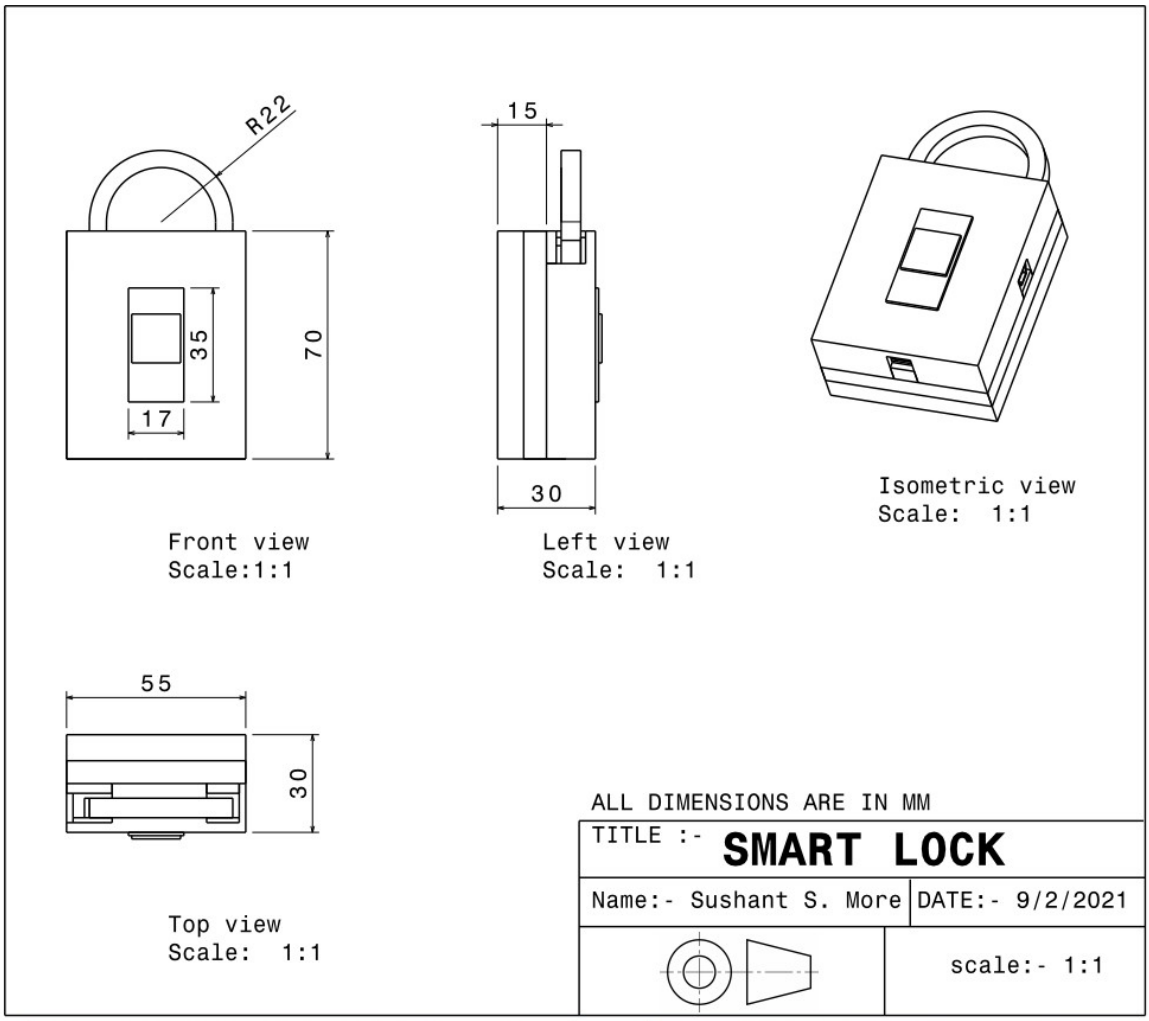
R22
35
70
17
Front view
Scale:1:1
15
30
Left view
Scale: 1:1
Isometric view
Scale: 1:1
55
30
Top view
Scale: 1:1
ALL DIMENSIONS ARE IN MM
TITLE :- SMART LOCK
Name:- Sushant S. More
DATE:- 9/2/2021
scale:- 1:1

FUTURE SCOPE

With appropriate designing and custom circuit the footprint can be reduced and this feasible designing can be produced can sold at a much cheaper price.

The use of conventional locks will be modified whit more security when used in application. With appropriate manufacturing more quality can be achieved.

CONCLUSION

After the successful attempt of the project we come to conclusion that

- Despite the disadvantages and limitation of mechatronics in the optimization of the conventional systems the process advances the mechanism, makes operating easy , more user friendly and increasesefficiency.
- While conducting the project we undergo learning of programming, coding, and operation of auridno in the field ofmechatronics.
- We also undergo the process of 3D printing manufacturingprocess.

26.MultipurposeLocomotivewithWireless Communication	
NameoftheCollege	LokmanyaTilakCollegeof Engineering
Name of theGuider	VikasKshirsagar
CollegeStudents Name	AbhishekTripathi&KunalLogade
SchoolStudentsName	OmkarChaudhari&PranayAtkari
Name ofSchool	ShriSadguruVamanbaba Madhyamik VidyalaGhot

- Abstract

- Nowadays due to Global Pandemic we are suffering and to recoverfrom thisweneed to change ourdaily habits.
- Oneof themisFollowSocialDistancing.
- People like Doctors, Nurses & Paramedical Staff who are incontinuouscontactwithvirusare nowalsoaccidentlyactasacarriers.
- So we planned to make a robot which can be handled from safedistance anddo multiplethings
- We will control our locomotive from safe distance about 10 meters ormorethanthatusing microcontroller.
- So thatwecanachieveour mottoofnocontact with virus.
- We will use ESP8266 to achieve demonstration level of wirelesscommunicationbetweencontroller andreceiver.
- We will also add many functions like self sanitizing of machine toachieveno cross infectionbetween two patients.

- Planning ofWork /Process

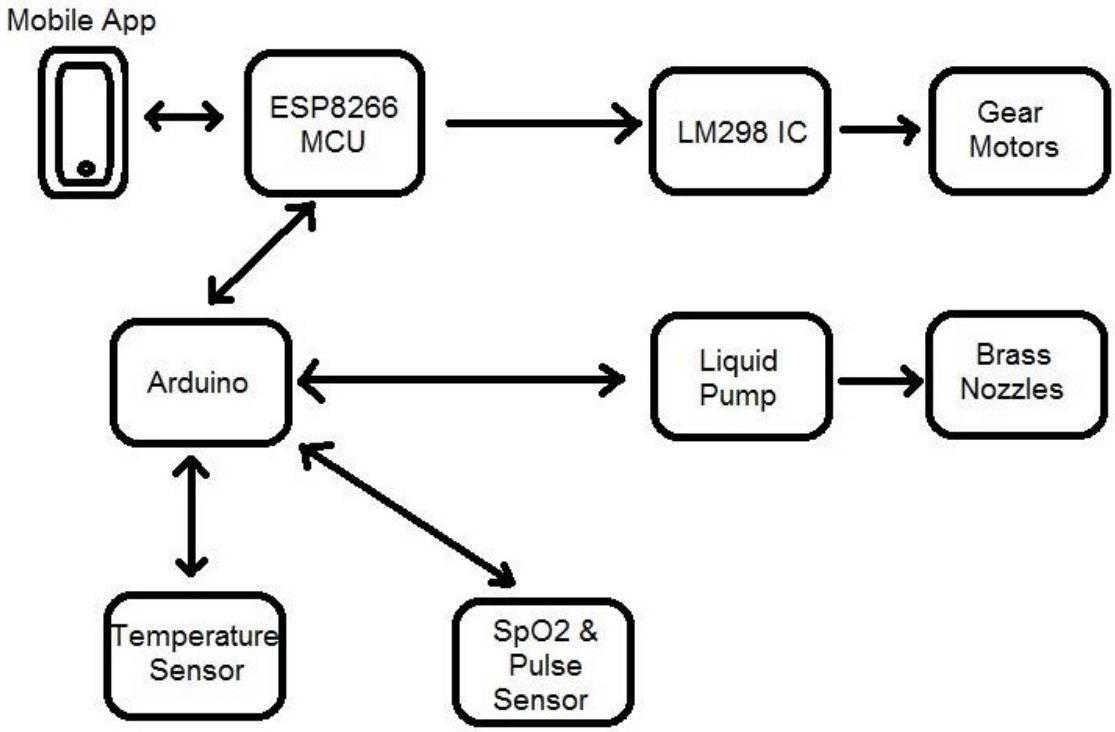

- Method

- In our project we are trying to make We will use ESP8266 module forwireless communication which will provide us around 10 meteraccessibledistancewith moderateobstaclesinbetween.
- Arduinowillbeusedforcontrollingpurpose asidealcontroller.
- EveryfunctionwillbeprogrammedinArduino.
- For accessing the robot we can use android app or remote controller.But we will try to control this using android app so that we can learnfewmorethings out ofit.

- Benefits

- Nophysicalcontact withpatients.
- Easy operationandMultipurpose.
- Canbe usedwith varioussensors.
- Usable for datacollection frompatients.
- Canbeusedfor providingmedicationsto patients.
- Canalsobe usedfor cleaningpurpose.
- Operation from very safe distance even with some obstacles inbetweencontrollerandreceiver.
- Can be easily connected and operated from any device. Connection issecuredwith WPA2protection

- Summary

- Wewilluse androidappforcontrollingfeature.
- Android app will communicate with Arduino using WiFi connectionestablishedbysystemitself.
- Arduino will control motors of locomotive and robot using motordriverIC.
- Arduinowillalsocontrolliquidpumpconnectionfor self sanitization.
- The values received from temperature and SpO2 sensor will becommunicated and displayed over WiFi and will be shown on MobileAppDisplay

- COST
- Thetotal cost ofthis projectis rupees 5000/-

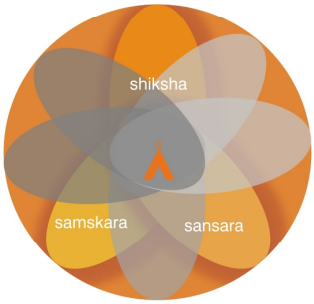

Agastya is built on the ancient Indian wisdom of holistic education. Its uniqueness lies in the advocacy of **Shiksha (education)**, encapsulating **Samskara (values)**, towards an enriched **Sansara (universe).**

Agastya International Foundation

101, Varsav Plaza,12,
Jayamahal Main Road,
Bangalore- 560 046
T: 080 - 41124132 / 23545054
www.agastya.org

info@anveshana.org
www.anveshana.org